;

Anolis
A ROBE Business

Agame

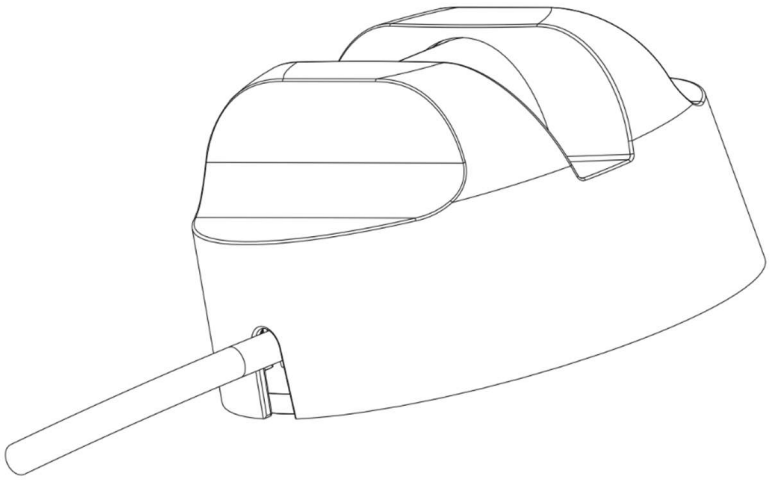

QR code for user manual

USER MANUAL

Version 1.5

Table of contents

1. Safety instructions 3
2. Fixture exterior view 5
3. Control and connection 5
4. Installation 8
4.1 Mounting the fixture 8
4.2 Connection to power 11
4.3 Example of Control panel in RDM manager 16
5. Software update 18
6. Technical specifications 20
7. Cleaning and maintenance 24
7.1 Disposing of the product 24
8. ChangeLog 24

FOR YOUR OWN SAFETY, PLEASE READ THIS USER MANUAL CAREFULLY
BEFORE POWERING OR INSTALLING YOUR Agame !
Save it for future reference.

This device has left our premises in absolutely perfect condition. In order to maintain this condition and to ensure safe operation, it is absolutely necessary for the user to follow the safety instructions and warnings written in this manual.

The manufacturer will not accept liability for any resulting damages caused by the non-observance of this manual or any unauthorized modification to the device.

Unauthorized modification will void warranty.

1. Safety instructions

DANGEROUS VOLTAGE CONSTITUTING A RISK OF ELECTRIC SHOCK IS PRESENT WITHIN THIS UNIT!

Always disconnect the fixture from power before cleaning, servicing or installing.

This fixture should be operated only from the type of power source indicated on the marking label. If you are not sure of the type of power supplied, consult your authorized distributor or local power company.

Always disconnect the fixture from AC power before servicing or cleaning.

Make sure the power/data cable is not damaged by sharp edges.

Do not install the unit near an open flame.

Refer servicing to qualified service personnel.

Do not connect this fixture to a dimmer pack.

This fixture falls under protection class III.

LED light emission. Risk of eye injury. Do not look into the beam from a short distance without suitable protective eyewear. Do not look at LEDs with magnifiers or similar optical instruments that may concentrate the light output.

The fixture was designed for outdoor use. This fixture must not be used for underwater installation.

When choosing the installation spot, please make sure that the fixture is not exposed to extreme heat or dust.

Avoid using the unit in locations subject to possible impacts.

The fixture body never must be covered with cloth or other materials when the fixture is under operation.

Only operate the fixture after having checked that the housing is firmly closed and all screws are tightly fastened.

The fixture becomes hot during operation. Allow the fixture to cool approximately 30 minutes prior to servicing or maintenance.

Please consider that unauthorized modifications on the fixture are forbidden due to safety reasons!

Please use the original packaging if the fixture is to be transported.
If this device will be operated in any way different to the one described in this manual, the product may suffer damages and the warranty becomes void. Furthermore, any other operation may lead to dangers like short-circuit, burns, electric shock etc.

The product (covers and cables) must not be exposed to a high frequency electromagnetic field higher than 3V/m.

Immunity of the equipment is designed according to the standard EN 55035 Electromagnetic compatibility of multimedia equipment - Immunity requirements.

Emission of the equipment complies with the standard EN55032 Electromagnetic compatibility of multimedia equipment – Emission Requirements according to class B.

Emission of the equipment complies with the standard EN55032 Electromagnetic compatibility of multimedia equipment – Emission Requirements according to class B.

This equipment has been tested and found to comply with the limits for a Class B digital device, pursuant to part 15 of the FCC Rules. These limits are designed to provide reasonable protection against harmful interference in a residential installation. This equipment generates, uses and can radiate radio frequency energy and, if not installed and used in accordance with the instructions, may cause harmful interference to radio communications. However, there is no guarantee that interference will not occur in a particular installation. If this equipment does cause harmful interference to radio or television reception, which can be determined by turning the equipment off and on, the user is encouraged to try to correct the interference by one or more of the following measures:
- Reorient or relocate the receiving antenna.
- Increase the separation between the equipment and receiver.
- Connect the equipment into an outlet on a circuit different from that to which the receiver is connected.
- Consult the dealer or an experienced radio/TV technician for help.

Warning for fixtures with Harsh Environment Finish (HEF):
Handle with care!
Avoid any damage to the painted surface.
Damaging the paint may result in corrosion and loss of warranty.

2. Fixture exterior view

Standard version **Rear version**

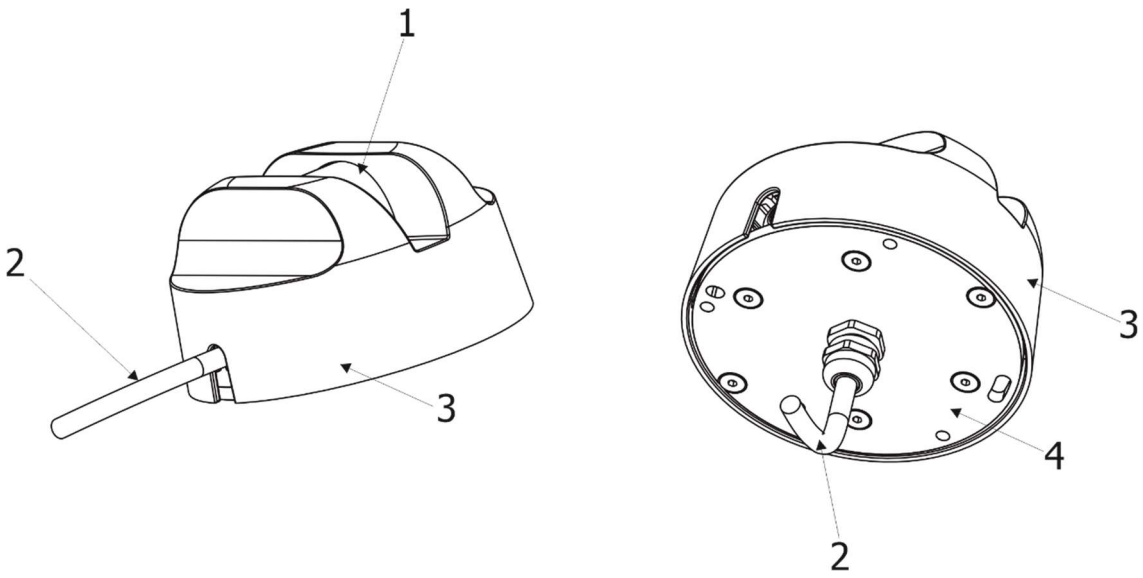

1. Transparent plastic cover
2. Supply cable
3. Top cover
4. Stainless steel base

3. Control and connection

The Agame modules should be connected to the E-Box Remote or E-Box Remote basic via junction boxes.
The Agame modules have to be operated in Pass-Through mode.

The E-box Remote has to be switched to the Pass-Through mode.

Example of connection with E-box Remote

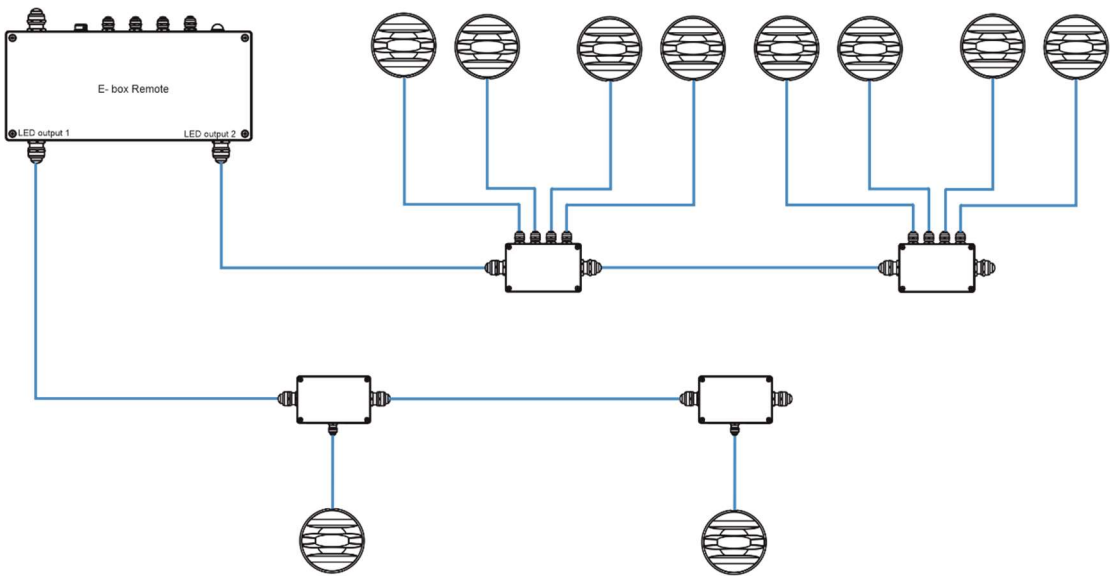

Example of connection with E-box Remote Basic

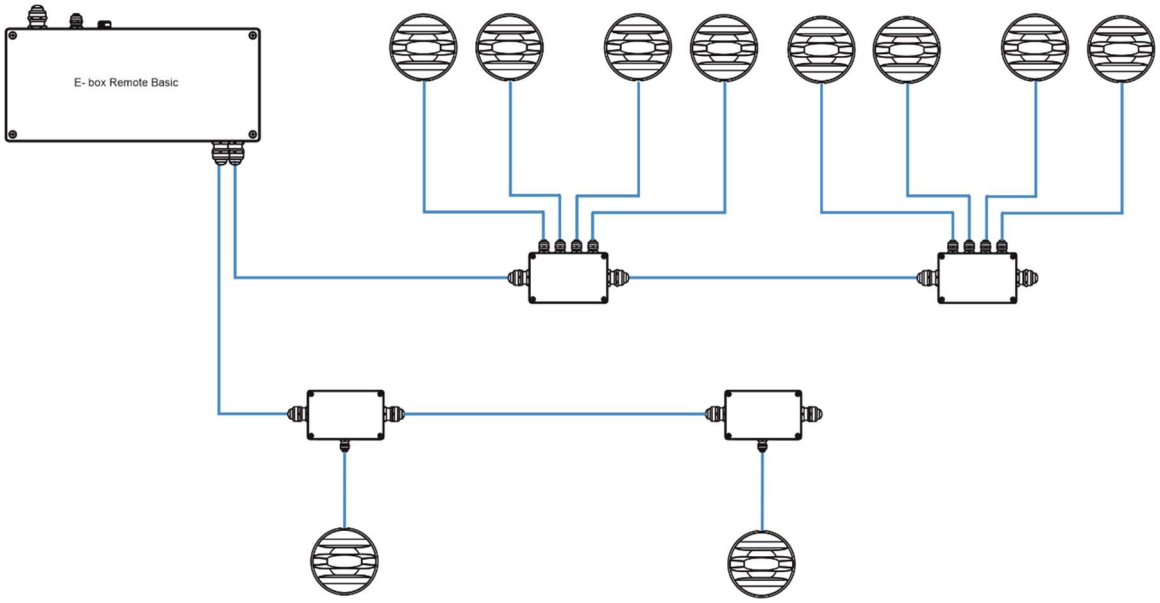

Note. Combination of Agames amd Calummas XS or Emineres Remote is possible.
Example:

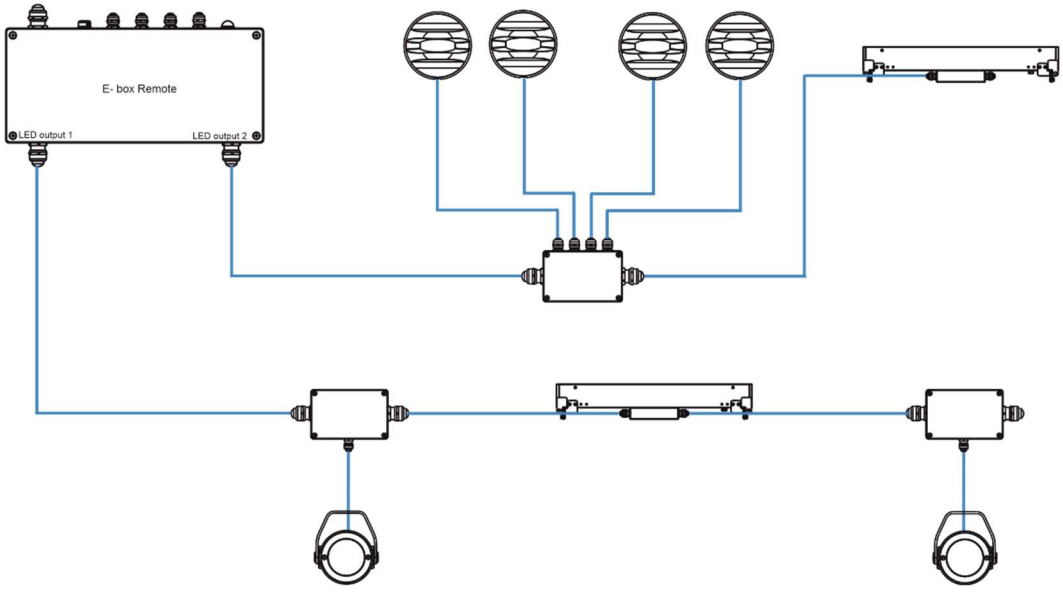

From point of view of driver load (E-box Remote/E-box Remote Basic), max. number of Agames connected to one E-box Remote/E-box Remote Basic is 40 but Agames have to be operated in the Pass-through mode, it means that max. 32 Agames can be connected in one string.
Max. number of Agames connected to the E-box Remote/E-box Remote Basic also depends on cable length.

E-box Remote

Cable length *	Max. number of Agames
50 m	25 per output, 40 in total
100 m	20 per output, 40 in total

E-box Remote Basic

Cable length *	Max. number of Agames
50 m	25
100 m	20

* Cable length is a total cable length on both LED outputs.

Example:

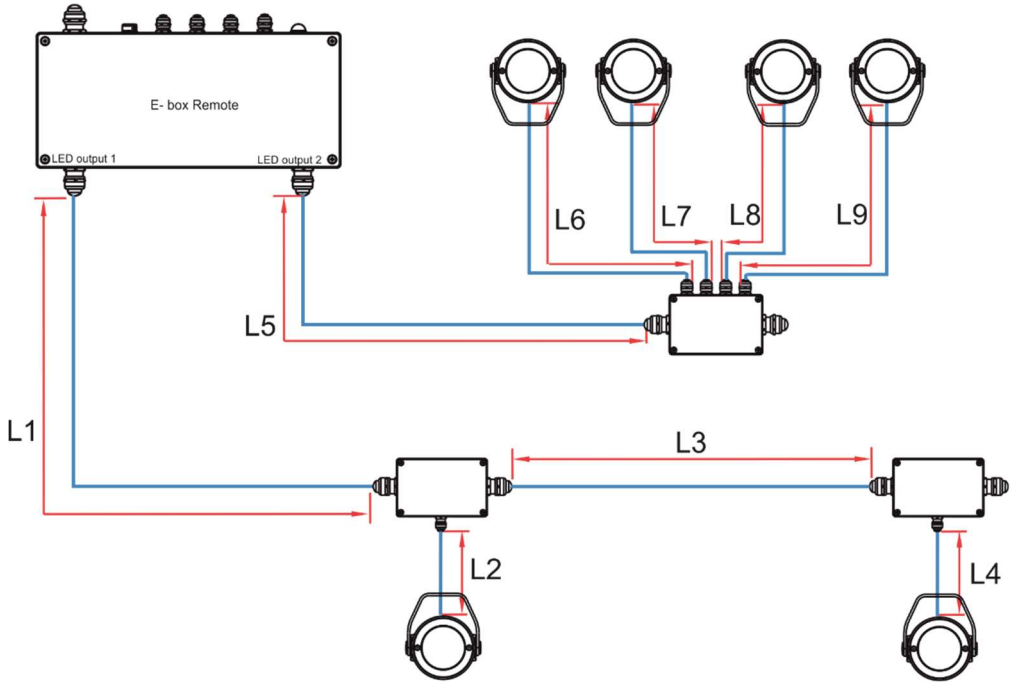

Total cable length=L1+L2+L3+L4+L5+L6+L7+L8+L9

4. Installation

4.1 Mounting the fixture

1. Remove the top cover (3) from the fixture. The top cover is fastened to the base (4) by means of two spring locks in this cover and you do not need any instruments to remove it .
Push your thubs on the plastic cover (1) and by means of your fingers pull the top cover (3) up.
The top cover (3) is secured to the base (4) by the safety wire (5).

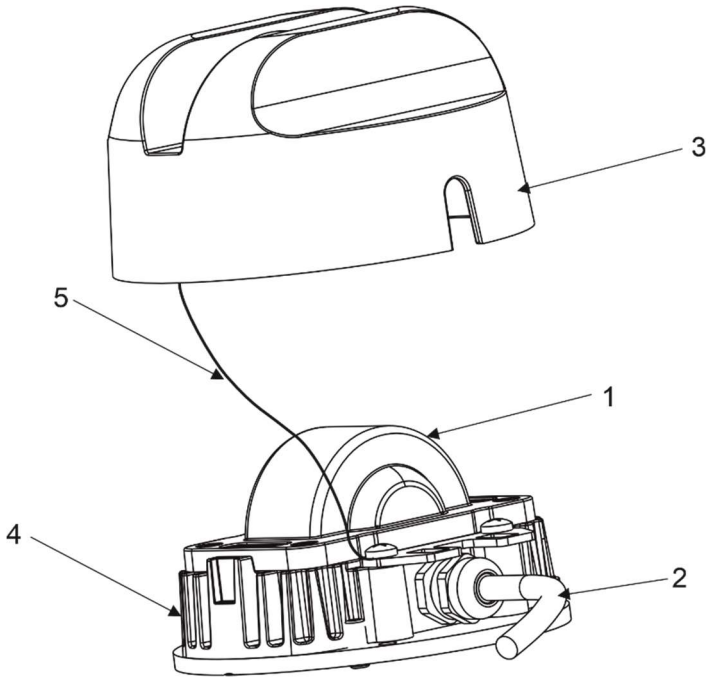

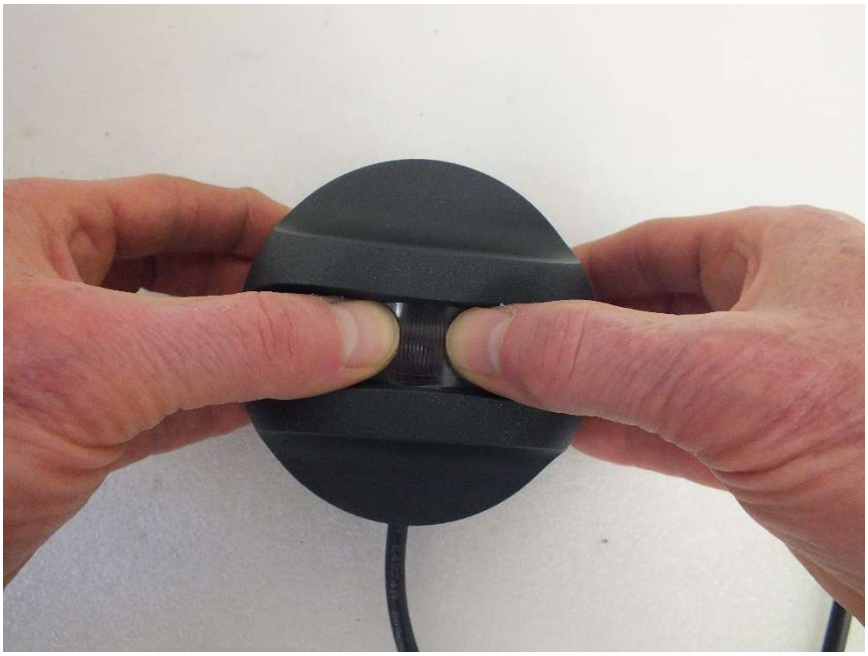

The Agame can be fastened in any orientation on a flat, non-flammable surface by means of two mounting openings (6).
For the rear version of the Agame, prepare suitable hole for cable gland (7) in the mounting surface.

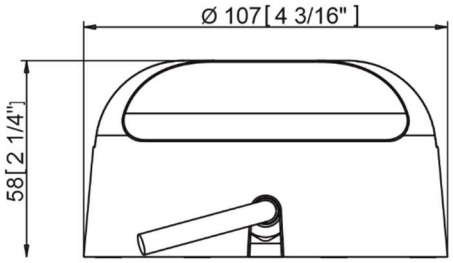

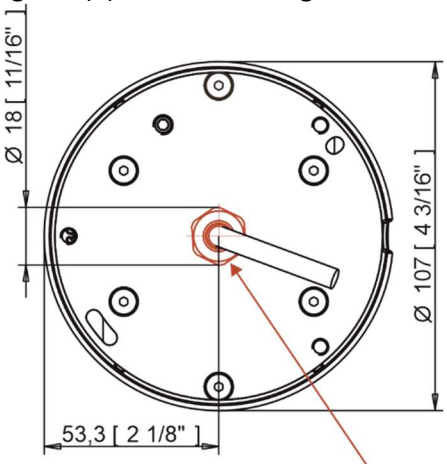

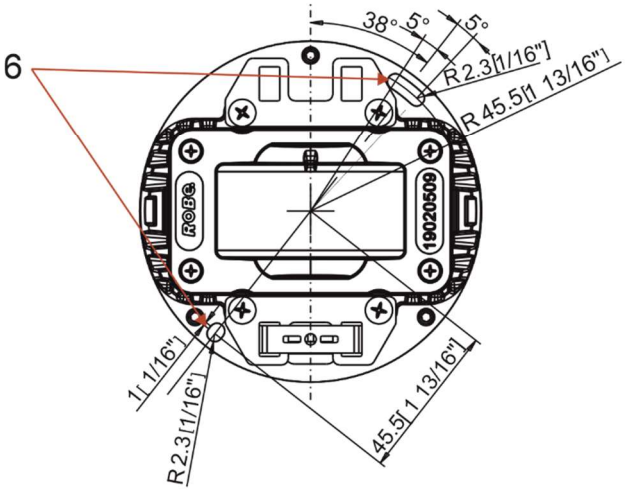

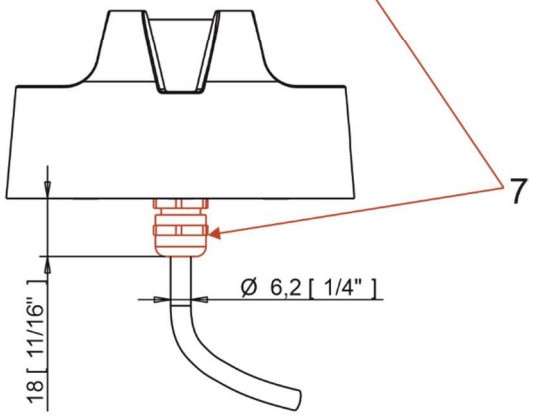

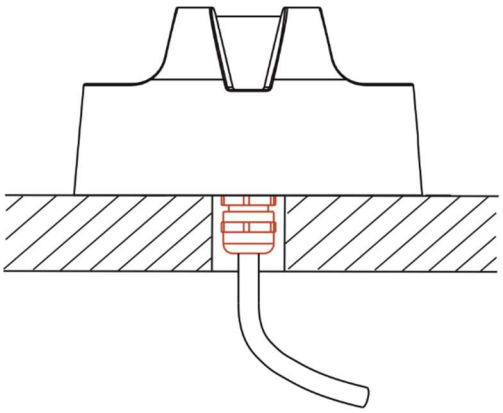

The three adjusting screws (8) allows you to align the base of Agame in a horizontal plane, use an Allen key 2.5 adjusting the plane of the Agame base.

Top side of the base

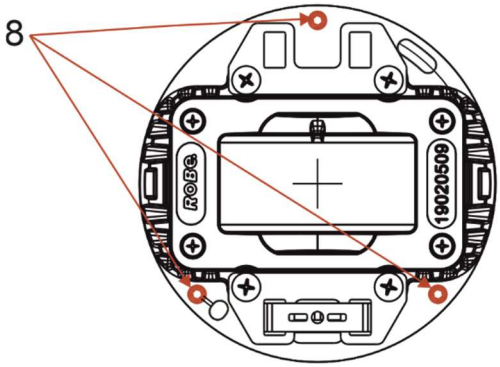

Bottom side of the base

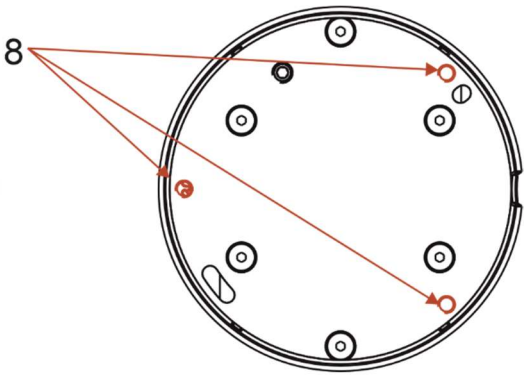

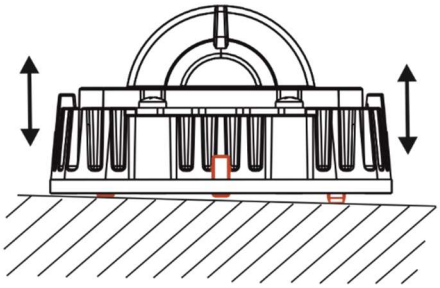

Ensure that the structure to which you are attaching the fixture is secure.

4.2 Connection to power

The unit must be installed by a qualified electrician in accordance with all national and local electrical and construction codes and regulations.

When connecting Agames to the E-box (E-box Remote or E-box Remote Basic), make sure that the E-box is disconnected from power!

Junction box installation

Junction box with one output

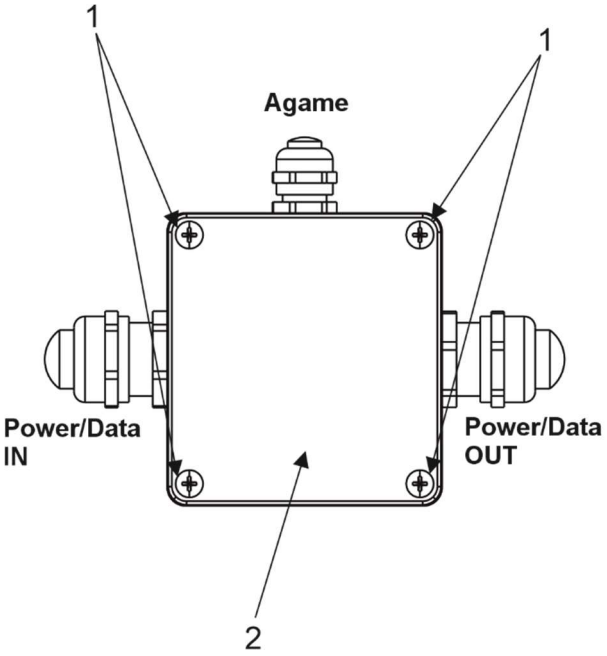

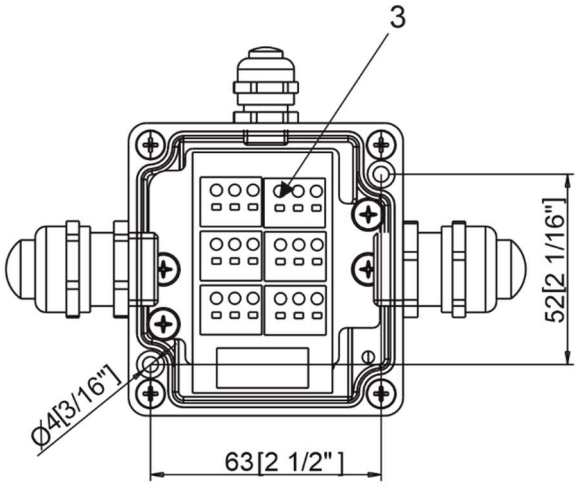

Junction box with four outputs

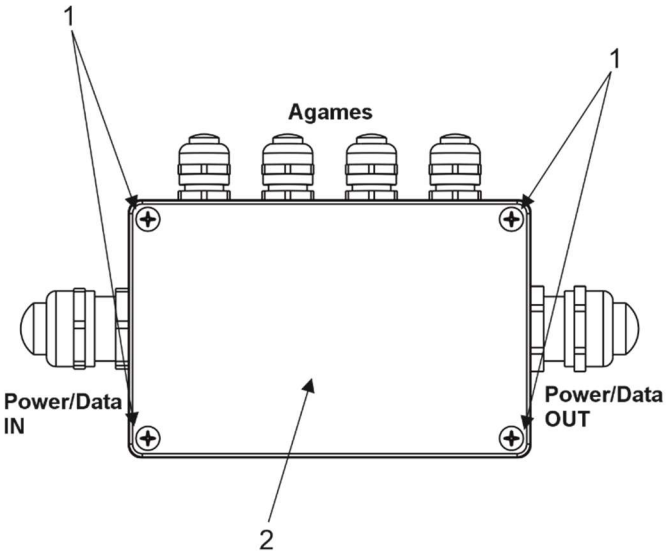

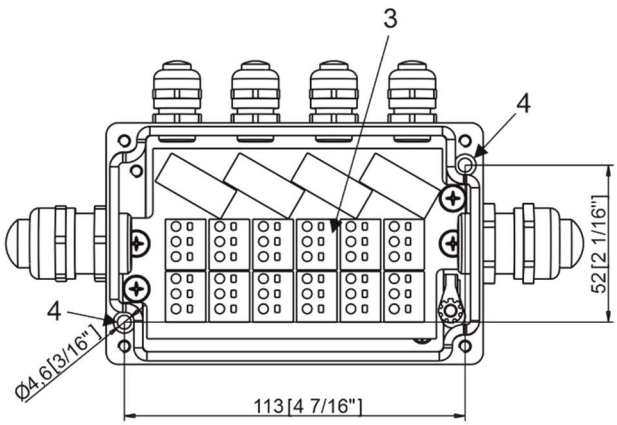

1.Unscrew the four screws (1) from the cover (2) on the junction box to get access to the PCB with terminal blocks (3) and two mounting holes (4).
2. Screw the junction box on a non-flammable flat surface.
3. Connect cables to terminal blocks.

Two cable glands M20 x 1.5 serves for a power/data cable. One (or four) cable gland M12 x 1.5 serves for Agame connection cable.
Remove the end cap from the cable gland before passing the cable.
We recommend to apply an adequate layer of the paste LOCTITE 5331 on the plastic holder of the cable gland before inserting it into the body of the gland.

Cable gland M20x1.5 and M12x1.5

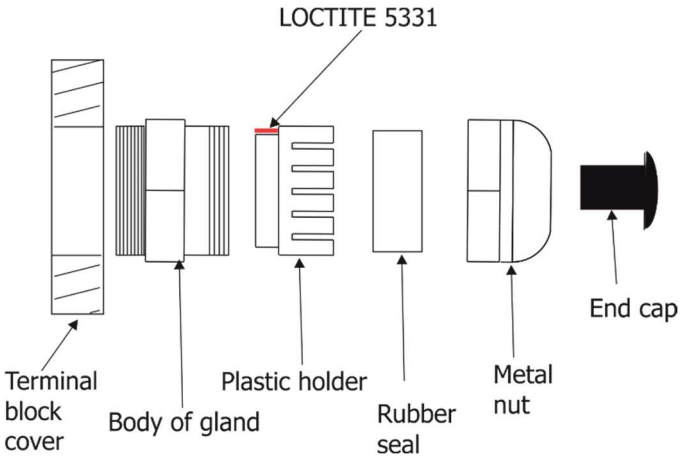

Wiring of connection blocks on PCB RB4232 in the junction box with one LED output.

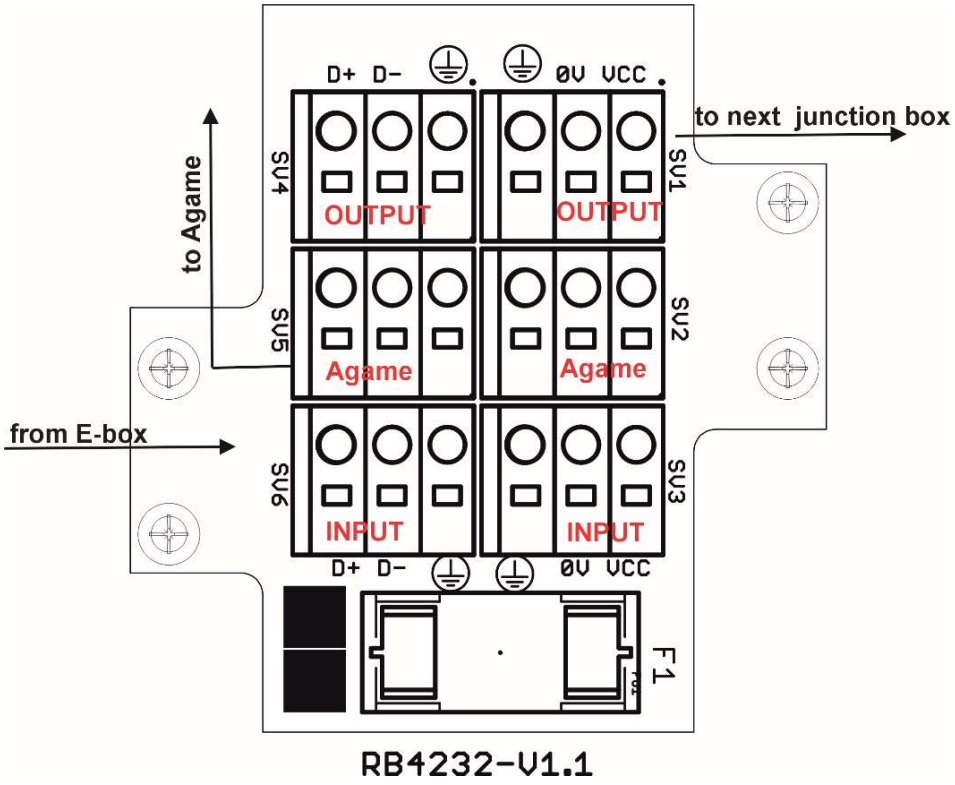

Fuse F1: 2A/500V AC.

Wiring of connection blocks on PCB RB4233 in the junction box with four LED outputs.

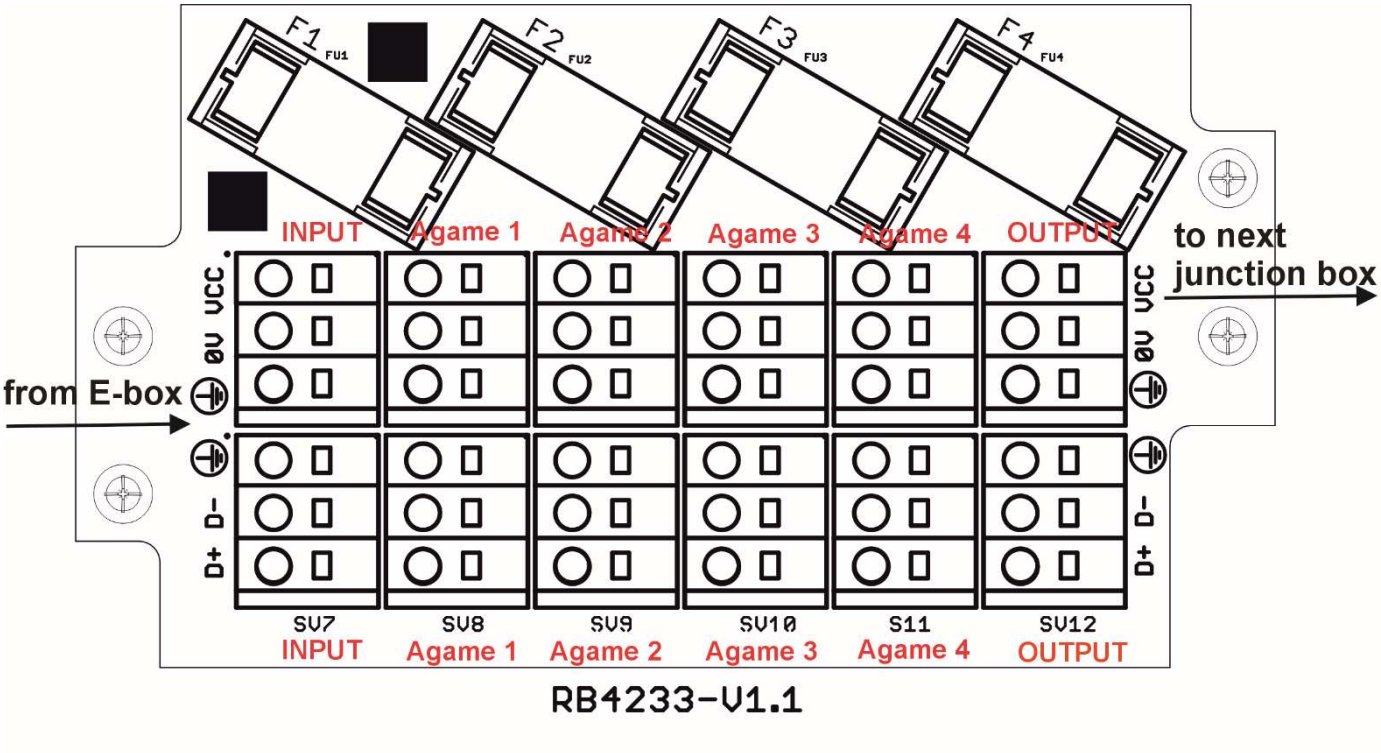

Fuse F1-F4: 2A/500V AC.

Agame connection

CE

Connector	**Vcc**	**D+**	**D-**	**0V**	⏚
Function	LEDs +	Data +	Data -	LEDs -	Not connected
Colour of wire	Red	Orange	White	Black	-

Colours of wires apply to the 5-cored cable UL 20969 5x 20AWG (P/N 13053481)

US

Connector	**Vcc**	**D+**	**D-**	**0V**	⏚
Function	LEDs +	Data +	Data -	LEDs -	Ground
Colour of wire	Red	Orange	White	Black	Yellow/green

Colours of wires apply to the 5-cored cable UL 20969 5x 20AWG (P/N 13053481)

Connection between junction box and E-box Remote and among junction boxes

CE

Connector	**Vcc**	**D+**	**D-**	**0V**	⏚
Function	LEDs +	Data +	Data -	LEDs -	Not connected
Colour of wire	Red	Orange	White	Black	-

Colours of wires apply to the 5-cored cable SJTW 5x 14AWG (P/N 1305 3336).

US

Connector	Vcc	D+	D-	0V	⏚
Function	LEDs +	Data +	Data -	LEDs -	Ground
Colour of wire	Red	Orange	White	Black	Yellow/green

Colours of wires apply to the 5-cored cable SJTW 5x 14AWG (P/N 1305 3336).

NOTE: Each DMX line of Agames connected to the LED output of the E-box Remote has to be terminated at the last fixture. Connect a 120 Ohm resistor between terminals D+ and D- in the last junction box.
Example:

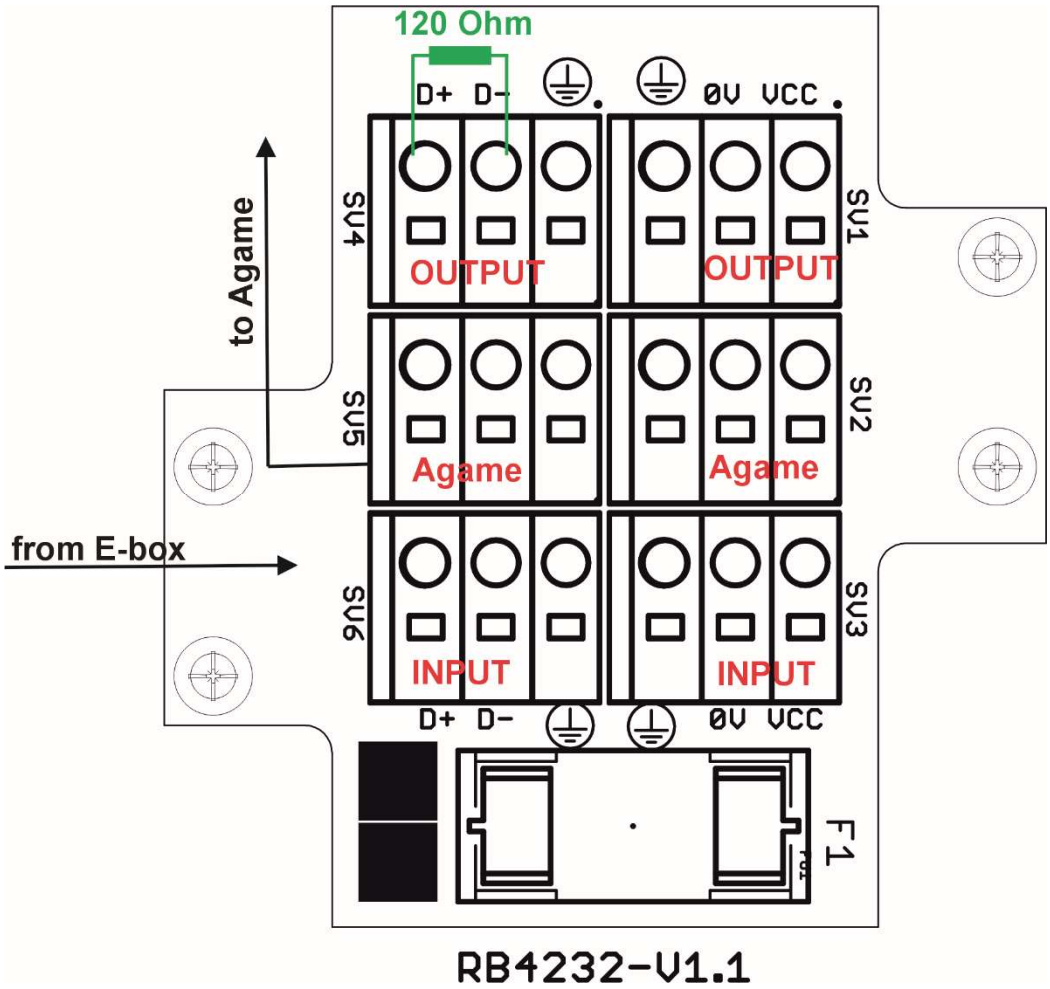

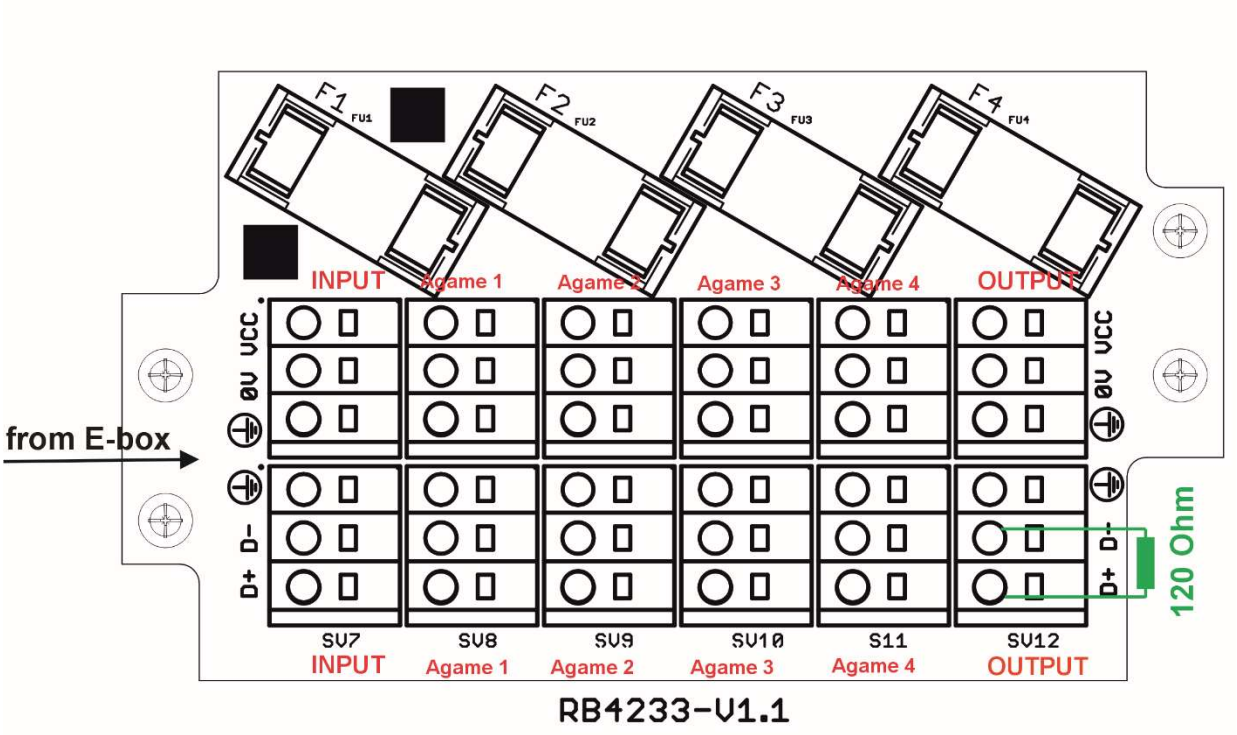

OR terminate via RDM Set the 'Manufacturer PID' 'Terminator active' to '1' at last fixture by means of RDM Control Panel.
Using 'Manufacturer PID' is needed if connection of Agame is realized without junction boxes.

Ensure **ONLY** the last fixture in the line is terminated using **ONE** of the above methods!

4. Screw the cover (2) back on the junction box.

4.3 Example of Control panel in RDM manager

The software RDM manager is available on the ROBE website (https://www.robe.cz/support), product RUNIT WTX.

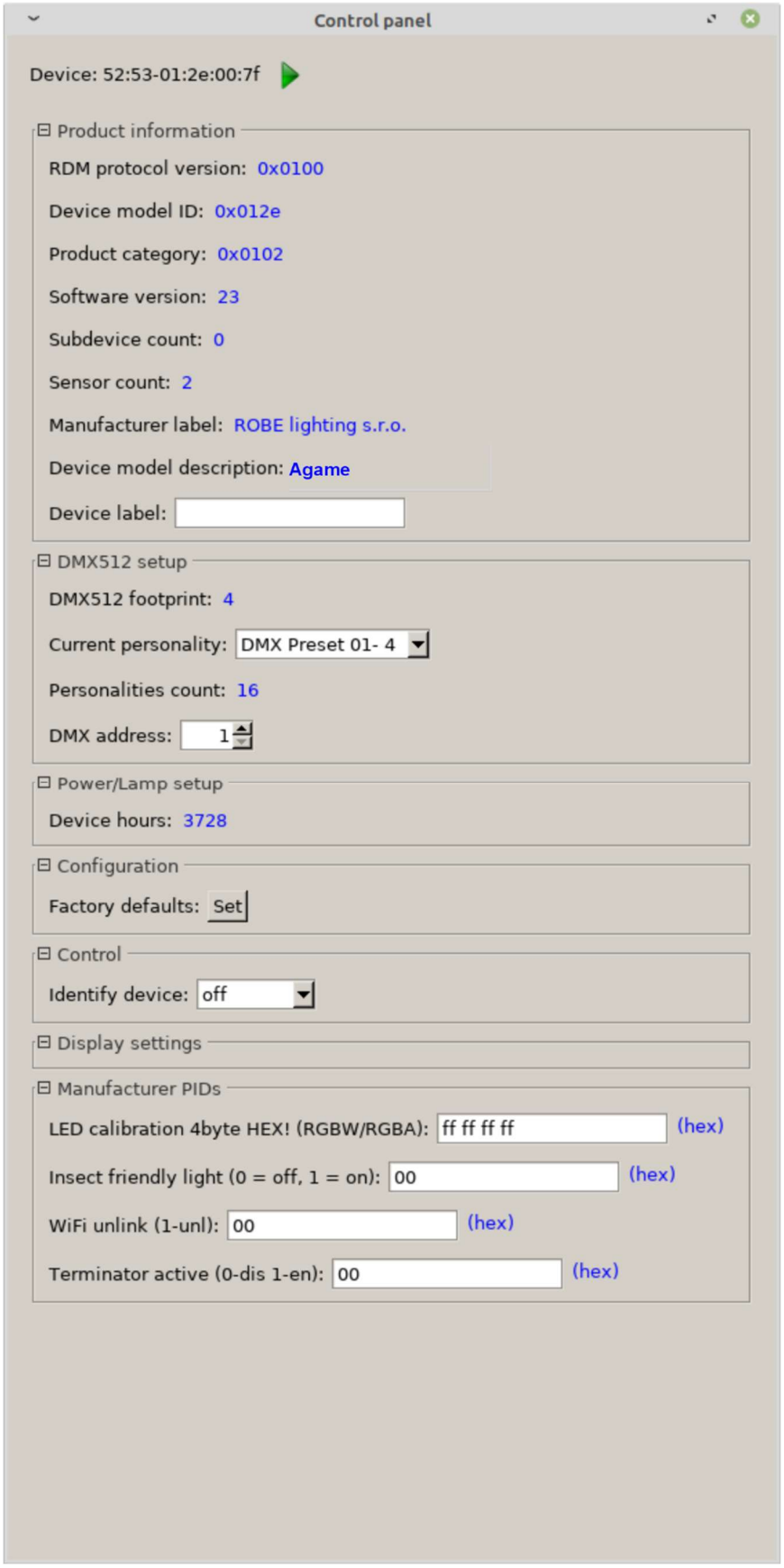

Green arrow saves changes made in the Control panel to the Agame.

Manufacturer PIDs

LED calibration 4byte HEX! (RGBW/RGBA) - the item shows 4 bytes of calibration values for calibrated white colours of RGBW(RGBA) Agame.
E.g.



CTC channel has to be set to some calibrated white colour (21 DMX-1800K, 66 DMX-2700K, 91 DMX-3200K, 141 DMX-4200K, 211 DMX-5600K, 255 DMX-6500K) otherwise the item shows values "ff ff ff ff" (and calibration values cannot be saved to the Agame).
Warning!
Changing and saving values in this item will affect calibrated white colour(s) of the Agame .

Insect friendly light - the item effects RGBA Agame only. If the item is on, blue colour is not used in calibrated white colours. This modification of white lights results in a smaller attraction of white light for insects (mosquitos, moths..). The function is also available from DMX chart (channel Special Function, range 7-10 DMX).

WiFi unlink - the item is inactive for Agame.

Terminator active - the item allows you to terminate line of Agame at last Agame.

5. Software update

Software update of Agame modules has to be done by means of the software ROBE Uploader running on PC.
The ROBE Uploader is a software for automatized software update of ROBE fixtures. The ROBE Uploader switches Agames to the update mode automatically.
Please see https://www.robe.cz/robe-uploader/ for more information.

Note: Agame modules in ON/OFF connection cannot be updated.

The Agame modules should be operated in the Pass-Through mode.
To update Agames including the E-box Remote:.

1. Update connected LED modules by means of the file Agame.lib in the ROBE Uploader.
2. Set the E-box Remote to the Standard mode and switch it off/on. Use the file EminereEbox.lib in the ROBE Uploader for software update of the E-box Remote.
3. After updating the E-box Remote, set the E-box Remote to the Pass-Through mode and switch it off/on.

Examples of connection for software update

1. By means of the Ethernet connection

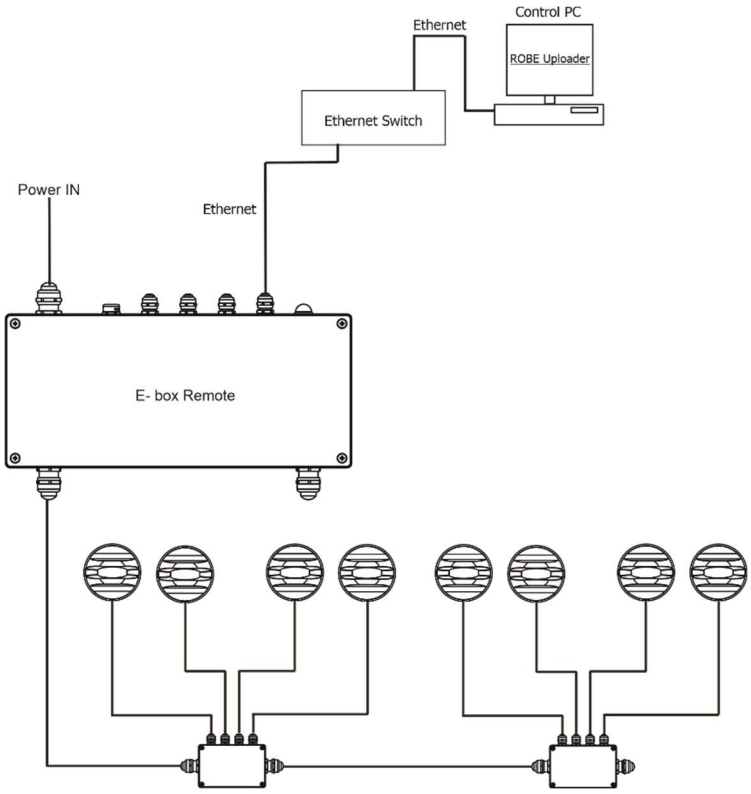

2. By means of DMX connection and Robe Universal Interface.

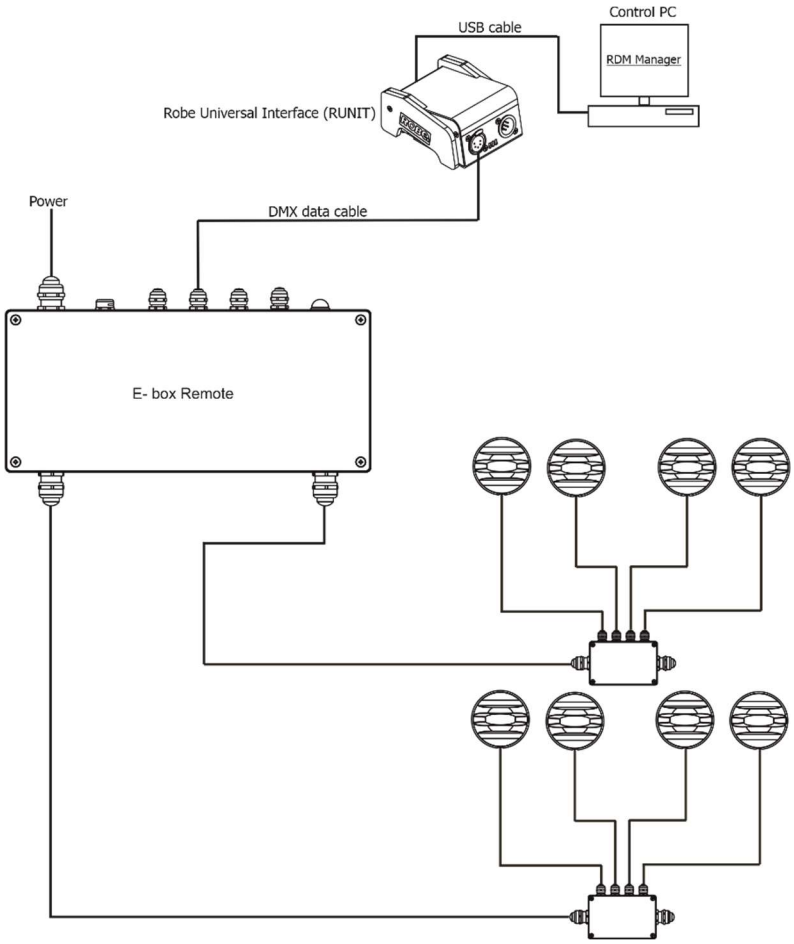

6. Technical specifications

Power supply

- Input voltage: 48 V
- Power consumption: 8 W

Optical

- Light source: 4 high power LEDs
- Colour variants: RGBW (W - 6500 K), RGBA
- Beam width: 6°, 10°, 20°, 30°
- Projected Lumen Maintenance: L90B10 >90.000 hrs, Ta = 25°C / 77°F

Compatible drivers

- E-box Remote
- E-box Remote Basic

Mounting method

- Via two mounting apertures

Housing

- High pressure die-cast aluminium body
- Transparent plastic

Cooling system

- Convection

Total heat dissipation

- 21 BTU/h (calculated)

Protection factor

- CE: IP 67 (IP 66 junction box)
- US: Suitable for wet location

Impact rating

- IK10

Operating ambient temperature range

- -20°C /+45°C (-4°F /+113°F)

Operating temperature

- +75°C @ ambient 35°C (167°F @ambient 95°F)

Connection

- Via E-box Remote/E-box Remote Basic

  Agame IN: cable UL 20969 5x 20AWG (P/N 13053481), length 1m standard
  Interconnecting cable between junction boxes: SJTW 5x 14AWG (P/N 13053336)
  Junction Box for Calumma XS, (1x Output)
  Junction Box for Calumma XS, (4x Output)

Weight

- 0.45 kg (0.99 lbs)

Dimensions (All dimensions in mm [inch])

Standard version

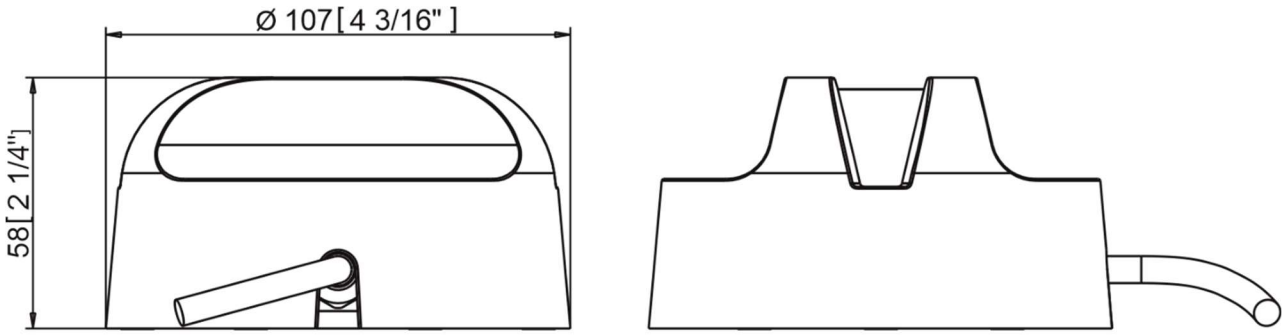

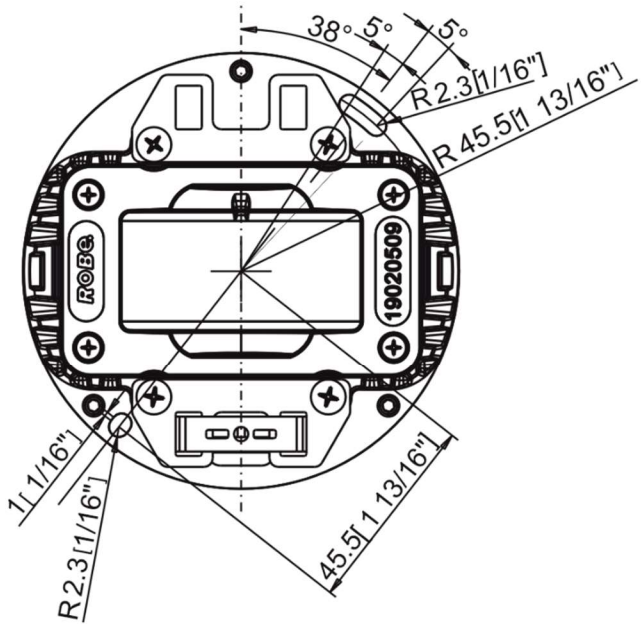

Rear version

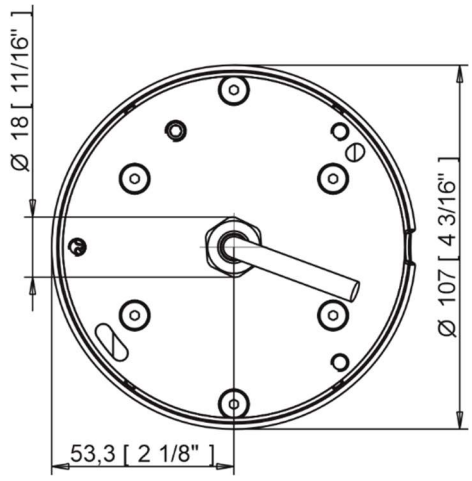

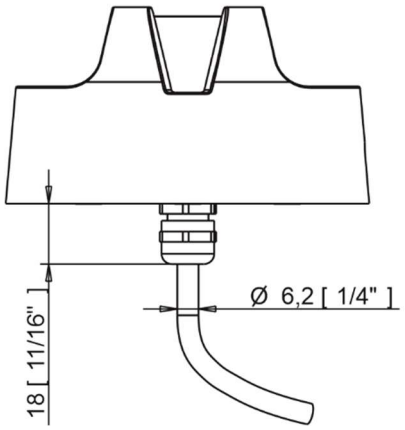

Junction box with one output

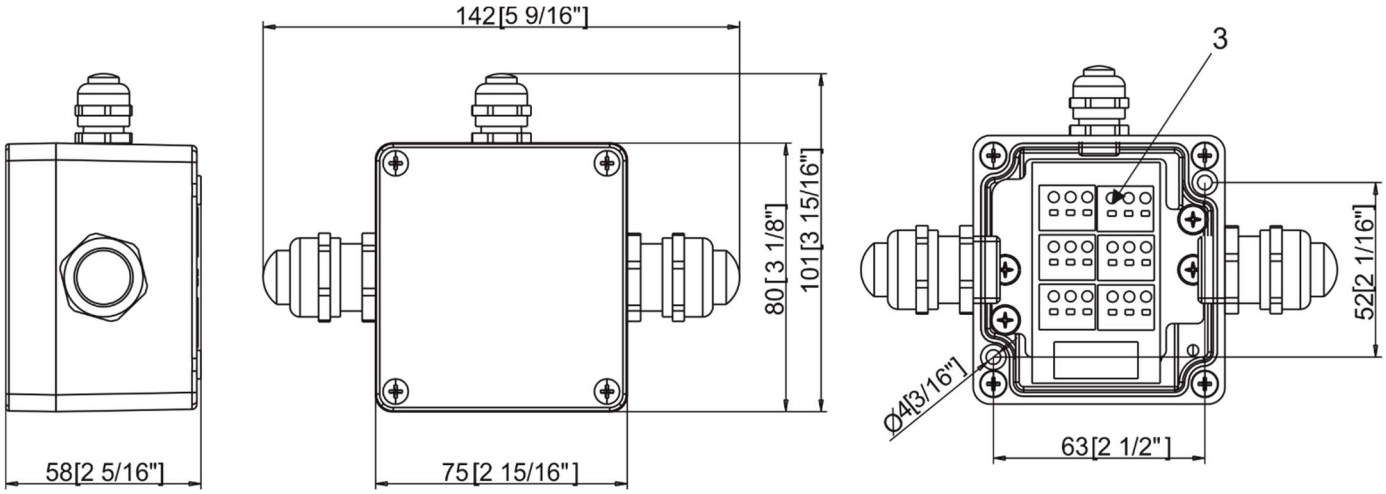

Junction box with four outputs

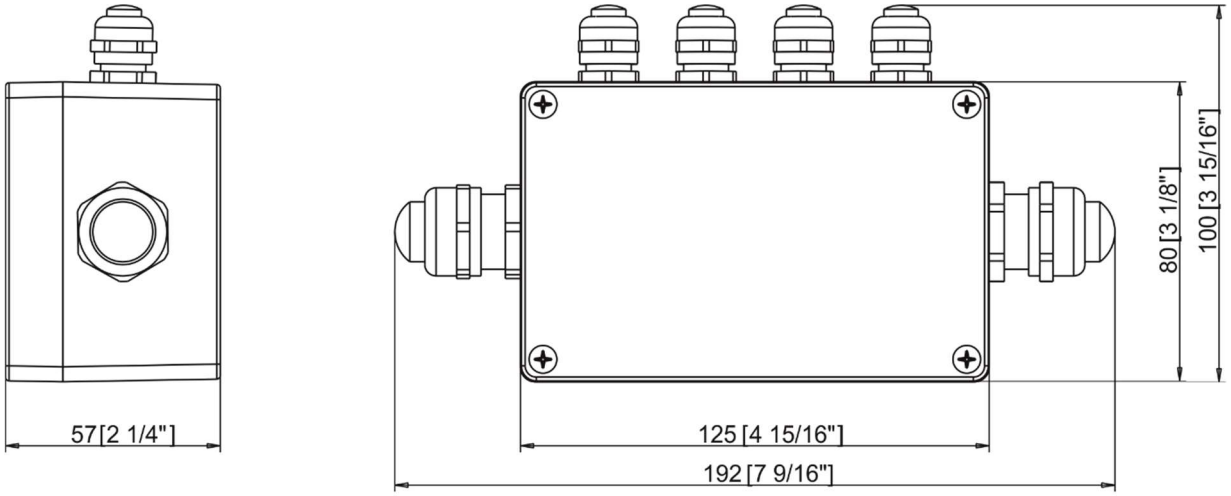

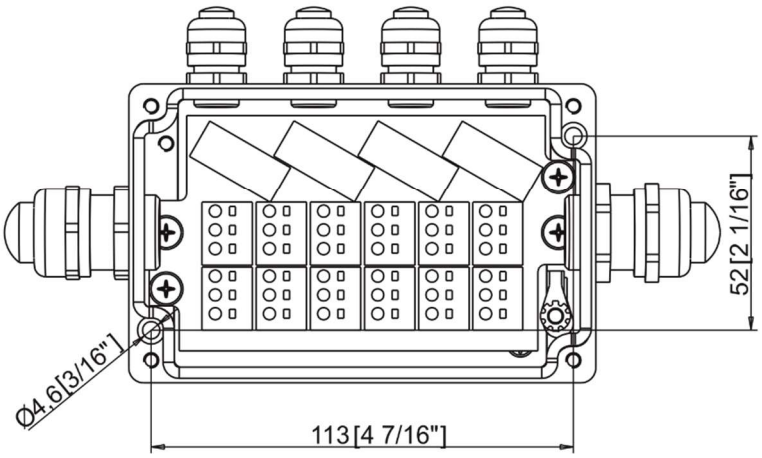

Included items

- 1 x Agame
- 1 x User manual

Optional accessories

Junction Box for Calumma XS, 1x Output, Ral 9011 (P/N 10980715)
Junction Box for Calumma XS, 4x Output, Ral 9011 (P/N 10980716)
Cable SJTW 5x 14AWG (P/N 13053336)

7. Cleaning and maintenance

DANGER !
Disconnect from the mains before starting any maintenance or cleaning work

Rinse off loose dirt with low pressure water spray. Wash the housing with a soft brush or sponge and a mild, non-abrasive washing detergent. Rinse it.
Maintenance and service operations are only to be carried out by a qualified person.
Should you need any spare parts, please use ROBE OEM parts.

7.1 Disposing of the product

To preserve the environment please dispose or recycle this product at the end of its life according to the local regulations and codes.

8. ChangeLog

This section summarizes changes in the user manual.

Version of manual	Date of issue	Description of changes
1.1	25/03/2025	Software update changed
1.2	27/08/2025	Junction box 1x ouput connection changed
1.3	24/09/2025	Junction boxes connection changed
1.4	21/07/2026	Termination by RDM (Manufacturer PID) added
1.5	29/10/2026	Dimensions of Agame changed

Specifications are subject to change without notice.
October 29, 2026
Copyright © 2024-2026 Robe Lighting - All rights reserved
Made in CZECH REPUBLIC by ROBE LIGHTING s.r.o. Palackeho 416/20 CZ 75701 Valasske Mezirici

DMX protocol for Agame

Version: 1.0 (16 modes in total)

Mode/Channels in all							
1	*2*	*3*	*4*	*5*	*6*	*7*	*8-10*
4	3	12	3	6	8	15	Reserved

Mode 1- RGBW(A)-8bit, Mode 2- RGB 8-bit, Mode 3- full RGBW(A)
Mode 4- White-full control, Mode 5- Reduced RGBW(A)
Mode 6- Reduced RGBW(A)+white control, Mode 7- Full control
Mode 7-Full RGBW(A)+virt. Colour wheel

RGBW/RGBA/RGB modes

Mode/channels								
1	*2*	*3*	*4*	*5*	*6*	*7*	DMX Value	Function	Type of control
-	-	-	-	-	-	1		**Special functions**	
							0	No function	step
								To activate following functions , stop in DMX value for at least 3 sec.	
							1-2	Save current DMX values to fixture as initial DMX values.	step
							3-4	Show saved initial DMX values	step
							5-6	Run factory demo sequences at switching fixture on (without DMX)	step
							7-8	Insect friendly light On (RGBA version only)	step
							9-10	Insect friendly light Off (RGBA version only)	step
							11-255	Reserved	
1	1	1	-	1	1	2		**Red**	
							0 - 255	Red LEDs saturation control (0-100%)	proportional
-	-	2	-	-	-	3		**Red Fine**	
							0 - 255	Red LEDs saturation control fine	proportional
2	2	3	-	2	2	4		**Green**	
							0 - 255	Green LEDs saturation control (0-100%)	proportional
-	-	4	-	-	-	5		**Green Fine**	
							0 - 255	Green LEDs saturation control fine	proportional
3	3	5	-	3	3	6		**Blue**	
							0 - 255	Blue LEDs saturation control (0-100%)	proportional
-	-	6	-	-	-	7		**Blue Fine**	
							0 - 255	Blue LEDs saturation control fine	proportional
4	-	7	-	4	4	8		**White (Amber)**	
							0 - 255	White LEDs saturation control (0-100%)	proportional
-	-	8	-	-	-	9		**White (Amber) Fine**	
							0 - 255	White LEDs saturation control fine	proportional
-	-	9	1	-	5	10		**Green correction**	
							0	Uncorrected white	step
							1-127	Minus green - uncorrected white	proportional
							128	Uncorrected white (128=default)	step
							129-255	Uncorrected white - Plus green	proportional
-	-	10	2	-	6	11		**Colour temperature correction (CTC)**	
							0	No function	step
							1 - 10	Tungsten dimming 2700 K	step
							11 - 20	Tungsten dimming 3200 K	step
							21-255	Colour temperature changing from 1800 K --> 6500 K	proportional
								(21-1800K, 66-2700K, 91-3200K,141-4200K, 211-5600K, 255-6500K)	
-	-	-	-	-	-	12		**Virtual Colour Wheel**	
							0	No function	step

Mode/channels							DMX Value	Function	Type of control
1	*2*	*3*	*4*	*5*	*6*	*7*			
							1-2	White 1800 K	step
							3-4	White 2700 K	step
							5-6	White 3200 K	step
							7-8	White 4200 K	step
							9-10	White 5600 K	step
							11-12	White 6500 K	step
							13	Blue (Blue=full, Red+Green+White/Amber=0)	step
							14-23	Red=0, Green->up,Blue =full, White/Amber=0	proportional
							24	Cyan (Red=0, Green=full, Blue =full, White/Amber=0)	step
							25-34	Red=0, Green=full, Blue->down, White/Amber=0	proportional
							35	Green (Red=0, Green=full, Blue =0, White/Amber=0)	step
							36-45	Red->up, Green=full, Blue=0, White/Amber=0	proportional
							46	Yellow (Red=full, Green=full, Blue=0, White/Amber=0)	step
							47-56	Red=full, Green->down, Blue=0, White/Amber=0	proportional
							57	Red(Red=full, Green=0, Blue=0, White/Amber=0)	step
							58-67	Red=full, Green=0, Blue->up, White/Amber=0	proportional
							68	Magenta (Red=full, Green=0, Blue=full, White/Amber=0)	step
							69-78	Red -> down, Green=0, Blue=full, White/Amber=0	proportional
							79	Blue (Red=0, Green=0, Blue=full, White/Amber=0)	step
								Transition effects	
							80-87	Rainbow effect (with fade time) from slow-> fast	proportional
							88-95	Rainbow effect (without fade time) from slow-> fast	proportional
							96-103	Full dynamic white (1800K->6500K->1800K) (with fade time) from slow-> fast	proportional
							104-111	Full dynamic white (1800K->6500K->1800K) (without fade time) from slow-> fast	proportional
							112-119	Dynamic warm white (1800K-3000K-1800K) (with fade time) from slow-> fast	proportional
							120-127	Dynamic warm white (1800K-3000K-1800K) (without fade time) from slow-> fast	proportional
							128-135	Rainbow effect + full dynamic white (with fade time) from slow-> fast	proportional
							136-143	Rainbow effect + full dynamic white (without fade time) from slow-> fast	proportional
							144-151	Blue/Green effect (with fade time) from slow-> fast	proportional
							152-159	Blue/Green effect (without fade time) from slow-> fast	proportional
							160-167	Red/Blue effect (with fade time) from slow-> fast	proportional
							168-175	Red/Blue effect (without fade time) from slow-> fast	proportional
							176-183	Green/Red effect (with fade time) from slow-> fast	proportional
							184-191	Green/Red effect (without fade time) from slow-> fast	proportional
							192-199	Blue/4000K effect (with fade time) from slow-> fast	proportional
							200-207	Blue/4000K effect (without fade time) from slow-> fast	proportional
							208-215	Green/4000K effect (with fade time) from slow-> fast	proportional
							216-223	Green/4000K effect (without fade time) from slow-> fast	proportional
							224-231	Red/4000K effect (with fade time) from slow-> fast	proportional
							232-239	Red/4000K effect (without fade time) from slow-> fast	proportional
						13		**Shutter/Strobe**	
							0-31	Shutter closed	step
							32-63	Shutter open	step
							64-95	Strobe-effect from slow to fast	proportional

Mode/channels							DMX Value	Function	Type of control
1	*2*	*3*	*4*	*5*	*6*	*7*			
							96-127	Shutter open	step
							128-143	Opening pulse in sequences from slow to fast	proportional
							144-159	Closing pulse in sequences from fast to slow	proportional
							160-191	Shutter open	step
							192-223	Random strobe-effect from slow to fast	proportional
							224-255	Shutter open	step
-	-	**11**	**3**	**5**	**7**	**14**		**Dimmer**	
							0 - 255	Light intensity coarse (0-100%)	proportional
-	-	**12**	-	**6**	**8**	**15**		**Dimmer Fine**	
							0 - 255	Light intensity fine	proportional

Copyright © 2024 Robe Lighting s.r.o. - All rights reserved
All Specifications subject to change without notice

DMX protocol for Agame

Version: 1.0 (16 modes in total)

Mode/Channels in all				TW Modes: Mode 11- White selection + Dimmer, Mode 12- WW + CW
11	*12*	*13*	*14-16*	PW Mode: Mode 13- Dimmer
3	4	2	Reserved	

TW and PW modes

Mode/channels			DMX Value	Function	Type of control
11	*12*	*13*			
1	-	-		**White colour selection**	
			0 - 255	White from 2700 K - 6500 K	proportional
-	**1**	-		**Warm White**	
			0 - 255	Warm White LEDs saturation control (0-100%)	proportional
-	**2**	-		**Cool White**	
			0 - 255	Cool White LEDs saturation control (0-100%)	proportional
2	**3**	**1**		**Dimmer**	
			0 - 255	Light intensity coarse (0 - 100%)	proportional
3	**4**	**2**		**Dimmer Fine**	
			0 - 255	Light intensity fine	proportional

Copyright © 2024 Robe Lighting s.r.o. - All rights reserved
All Specifications subject to change without notice