EMINERE® INGROUND 1 / 2 / 4 MC WALLWASHER

Eminere Inground MC Wallwasher is a robust in-ground luminaire specifically designed to provide smooth and uniform illumination of vertical surfaces. Its dedicated wallwasher optics ensure even light distribution across walls and façades while the Multi-Chip technology delivers excellent colour mixing and consistend light output. A stainless steel installation sleeve provides protection against corrosion and mechanical damage. With an IP67 protection rating, standard or anti--skid glass, and a wide range of colour variants, Eminere Inground MC Wallwasher is an ideal solution for exterior architectural applications requiring uniform wall illumination and precise colour performance.



KEY FEATURES

Application
Anti–skid glass option for pedestrian areas application. Easy to install into soft and hard ground.

Light Source
Full spectral LEDs selection with custom option on request. Output up to 1876 lm for Eminere Inground 2 MC (@12°, RGB-CW). Long LED lifetime over 90,000 hrs. Fixed wallwasher optics for smooth and uniform light distribution across vertical surfaces.

Durability
High durability with ingress factor of IP67 and walkover housing for highest durability requirements.

COLOURS

* UPON REQUEST

RGBW (6500 K)
RGBA
RGBL
PW (3000 K)
TW (3000-6500 K) *

CONTROL & PROTOCOLS

VIA E-BOX — OPTIONAL
WIRELESS DMX — OPTIONAL
DALI — OPTIONAL
NFC — FOR DMX VERSION ONLY

OPTIC OPTIONS

ASYMMETRICAL

WALLWASHER

FINISH OPTIONS

* CLOSEST RAL TONE
* HE = Harsh Environment

FIXTURE

Graphite Black RAL 9011*
HE Graphite Black RAL 9011*

SLEEVE & COVER PLATES

Stainless Steel

STANDARD & SPECIFICATION

IP67
IK10
CE
ETL US
ROHS
UKCA
5 YEAR — Warranty with Registration
Vibration Standard for Bridge

SPECIFICATION

ELECTRICAL	Input Voltage	120–277 V AC 50/60 Hz		
	Typical Power Consumption	**Eminere Inground 1 MC WW:** 30 W	**Eminere Inground 2 MC WW:** 50 W	**Eminere Inground 4 MC WW :** 90 W
OPTICAL	Light Source	High Power Multi Chip LEDs		
	Colour Variants	RGBW (W - 6500 K) | RGBA | RGBL | Pure White (W - 3000 K)		
		On Request: Tuneable White (3000–6500 K)		
	Beam Angle	Asymmetrical	Wallwasher	
	Lumen Output Delivered	**Eminere Inground 1 MC**	938 lm, (12°, @RGBCW, Clear Glass) | 1.011 lm, RGBW @ 18° (Anti-Skid) PRELIMINARY	
		Eminere Inground 2 MC	1876 lm, (12°, @RGBCW, Clear Glass) | 2.021 lm, RGBW @ 18° (Anti-Skid) PRELIMINARY	
		Eminere Inground 4 MC	3752 lm, (12°, @RGBCW, Clear Glass) | 4.042 lm, RGBW @ 18° (Anti-Skid) PRELIMINARY	
	Projected Lumen Maintenance	L90B10 >90.000 hrs, Ta = 25°C / 77°F		
CONTROL	Interface Protocol	Via E-Box range | Wireless DMX | DALI 2 | NFC (for DMX version only)		
	E-Box Control Protocols	USITT DMX512, RDM, ArtNet, MA Net, MA Net2, sACN, Kling-Net		
	Wireless DMX (Option)	Lumen Radio CRMX Technology		
	Setting / Addressing	Via Two Row LCD Display with Control Buttons or RDM communicator | NFC (Stand-alone)		
	Power Supply	Integrated		
	Connectivity	E-box Lite	Max. 32 pcs of Eminere Inground 1 / 2 / 4 MC	
PHYSICAL	Width x Height x Length	Eminere Inground 1 / 2 / 4:	186 x 228 x 407 / 707 / 1307 mm (7.32 x 8.98 x 16.02 / 27.83 / 51.46 in.)	
	Weight	**12.8 kg / 28.2 lbs**	(8.5 kg / 18.7 lbs **Eminere Inground 1 MC Fixture**, (5.5 kg / 12.1 lbs **Install. Sleeve**)	
		19.6 kg / 43.2 lbs	(12 kg / 26.4 lbs **Eminere Inground 2 MC Fixture**, 9.5 kg / 20.9 lbs **Install. Sleeve**)	
		35.4 kg / 78.1 lbs	(21 kg / 46.2 lbs **Eminere Inground 4 MC Fixture**, 18.7 kg / 41.1 lbs **Install. Sleeve**)	
	Housing	High Pressure Extruded Aluminium Body | End Caps - Die-Cast Aluminium | Tempered Glass		
		Anti-Skid (Option) | Stainless Steel Instalation sleeve for pre-instalation		
	Finish Options	Fixture	Graphite Black RAL 9011 | Harsh Environment Graphite Black RAL 9011 (Cost option)	
		Sleeve & Cover Plates	Stainless Steel	
	Connections	Junction Box		
	Mounting Method	Inground mount		
	Adjustability	Wallwasher version fixed, non-tiltable		
	Protection Factor (IP | IK)	IP67 / Suitable For Wet Locations	IK10	
	Max. Static Load	Standard Tempered Glass: 45kN	Anti-Skid Tempered Glass: 23kN	
	Cooling System	Convection		
	Operating Ambient Temperature	-20°C / +50°C (-4°F / +122°F)		
	Operating Temperature	+80°C @ Ambient +40°C (+176°F @ Ambient +104°F)		
CERTIFICATION	Listings	ETL / cETL, CE, RoHS, UKCA		
	Anti - Skid Glass Certification	UNE ENV12633 (Class 3), DIN 51130 (R-12), DIN 51097 (Class B), ASTM C 1028-07 (DRY: ≥ 0,7, WET: ≥ 0,6), EN101:91 MOHS (4-Point scale)		

SPECIFICATION

	Not Included Items	
ACCESSORIES	Mounting	Eminere Inground Mounting Sleeve
		Eminere Inground Cover Plate Continuous (incl. 1x Cover Plate Middle)
		Eminere Inground Cover Plate End
		Eminere Inground Trim StandAlone
	Cables & Connectors	Junction Box for Eminere Inground
		Insulation Re-enterable Electrical Insulating Resin
		Cable CE WCA | Cable US WCA

COLOUR MIXING PRINTS

STAND ALONE Specially designed glass printing to achieve optimal colour mixing and intensity distribution.

SYMMETRICAL

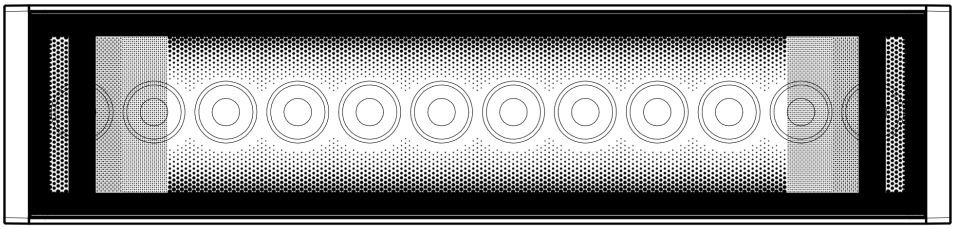

WALLWASHER

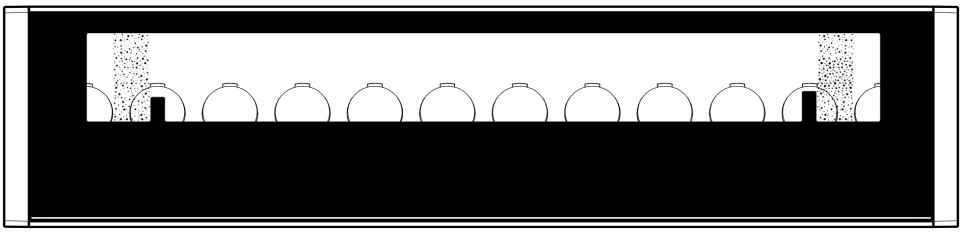

Note: Applies for RGBW, RGBA versions. Pure white and Tunable white versions are always without the end print (no matter on their position to other fixture).

DIMENSIONS

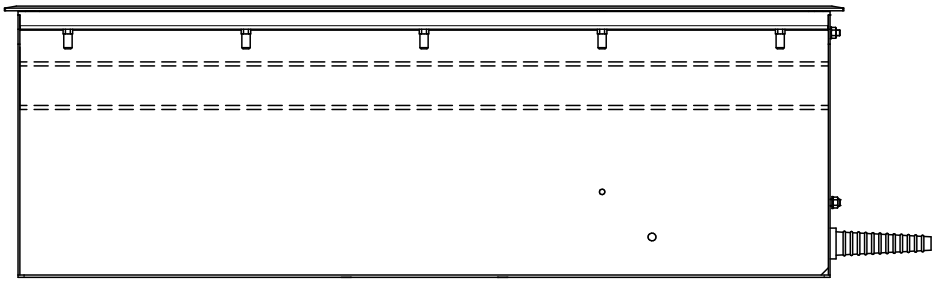

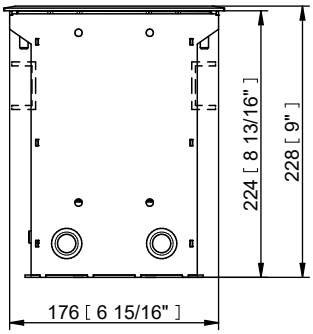

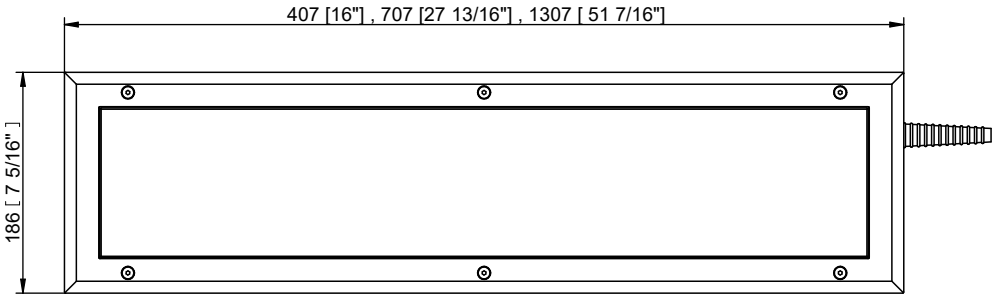

PHOTOMETRIC OVERVIEW

Based on RGBCW (CLEAR GLASS) version, all leds @ full

	Lumen Output (lm)		
	EMINERE INGROUND 1 MC	**EMINERE INGROUND 2 MC**	**EMINERE INGROUND 4 MC**
12°	938	1876	3752
15°	868	1736	3472
25°	870	1739	3478
35°	871	1741	3482
45°	865	1729	3458
65°	996	1728	3456
100°	837	1673	3346
10°x30°	871	1741	3482
10°x60°	853	1705	3410
15°x 45°	876	1752	3504
15°x90°	864	1727	3454
30°x90°	846	1691	3382
35°x60°	860	1719	3438

E-BOX SPECIFICATION

ELECTRICAL	Input Voltage	120–277 V AC 50/60 Hz		
CONTROL	Wireless DMX (Option)	Lumen Radio CRMX Technology		
	Interface Protocol	**E-box Lite:** USITT DMX512, RDM		
		E-box Daisy / Star: USITT DMX512, RDM, ArtNet, MA Net, MA Net2, sACN, Kling-Net		
	Operating Modes	**E-box Lite / Daisy:** Fixture Mode, Pixel Mode, Output Mode		
		E-Box Star: Total Mode, Fixture Mode, Pixel Mode, Output Mode		
	Display	Via Two Row LCD Display with Control Buttons or RDM communicator		
	Control System	E-box With Self Addressing Feature or Custom Setting Via LCD Display/RDM		
	Power Supply	Integrated		
	Connectivity	**E-box Lite**	144 of Eminere 1 (@ 230 V and 40m cable) via 1 Output	
		E-box Daisy	144 of Eminere 1 (@ 230 V and 40m cable) via 1 Output	
		E-box Star	144 of Eminere 1 (@ 230 V and 40m cable) via 6 Outputs	
PHYSICAL	Length x Width x Height	**E-box Lite**	220 x 120 x 81 mm (8.66 x 4.72 x 3.18 in.)	
		E-box Daisy	260 x 160 x 91 mm (10.24 x 6.30 x 3.58 in.)	
		E-box Star	280 x 230 x 111 mm (11.02 x 9.06 x 4.37 in.)	
	Weight	1.67 kg | 3.85 lbs	2.78 kg | 6.13 lbs	4.4 kg | 9.7 lbs
	Housing	Die-Cast Aluminium Case		
	Finish Options	Standard Colour	Graphite Black RAL 9011 | Grey Aluminium RAL 9007 | Pure White RAL 9010 | Sandstone RAL 1014	
		Harsh Environment	Graphite Black RAL 9011 | Grey Aluminium RAL 9007 | Pure White RAL 9010 | Sandstone RAL 1014	
		Cost Options	Custom RAL	
	Cables / Connections	Cable Grommet (stainless steel)		
	Mounting Method	Surface Mount , 4 Mounting Holes		
	Protection Factor	IP67 / Suitable For Wet Locations		
	IK Rating	IK10		
	Cooling System	Convection		
	Operating Ambient Temperature	-20 °C / +40 °C (-4 °F / +104 °F)		
CERTIFICATION	Listings	ETL / cETL, CE, RoHS, UKCA		

COMPARISON

	E-BOX LITE	E-BOX DAISY	E-BOX STAR
Power input	1	1	1
Fixture Output	1	1	6
Total load (current)	16A	16A	16A
DMX control	YES	YES	YES
RDM	YES	YES	YES
Art-Net	NO	YES	YES
Ethernet switch	NO	YES	YES
Kling-Net	NO	YES	YES
sACN	NO	YES	YES
MA Net, MA Net2	NO	YES	YES

E-BOX DIMENSIONS

E-BOX LITE

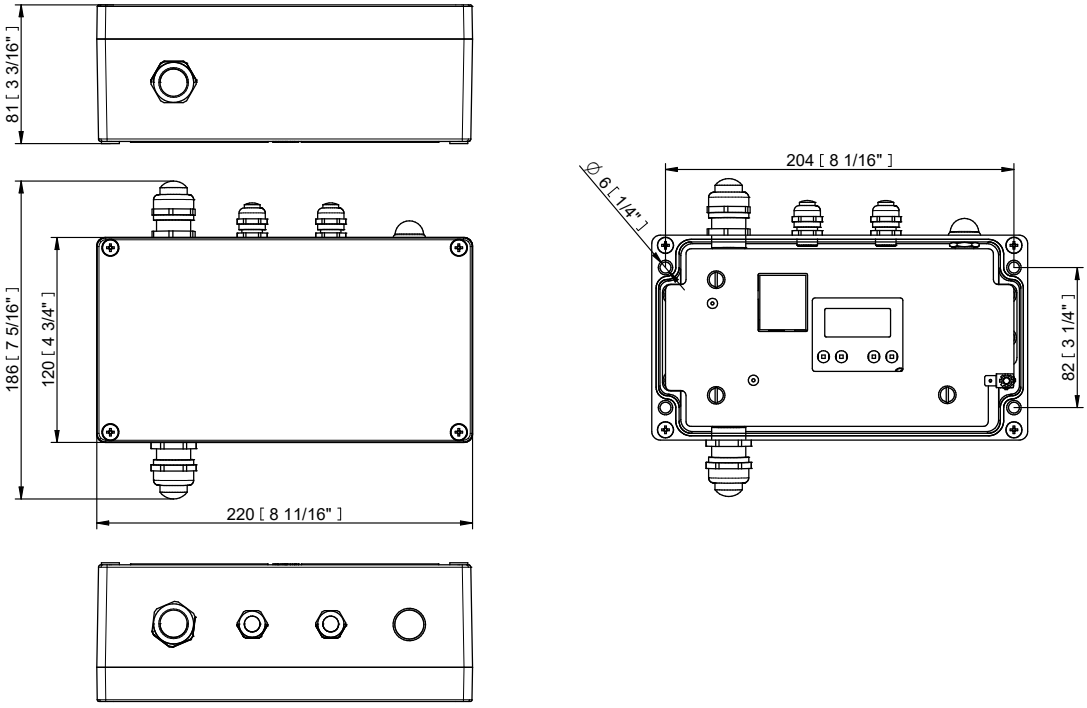

E-BOX DAISY

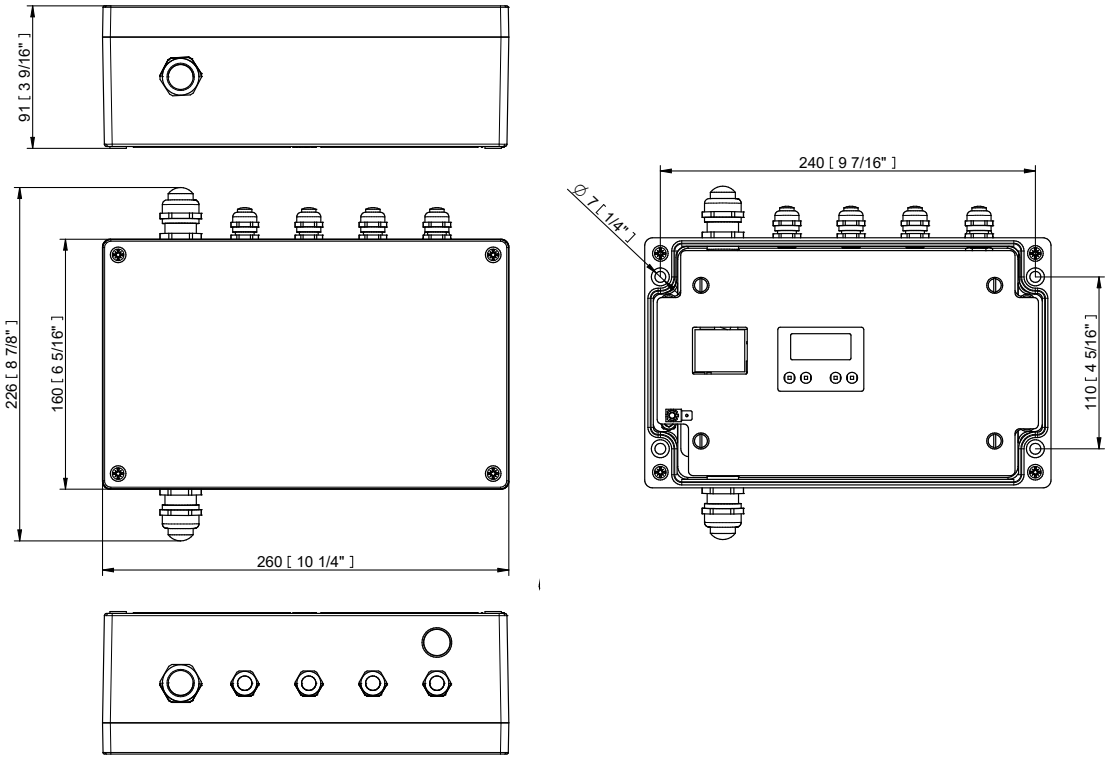

E-BOX STAR

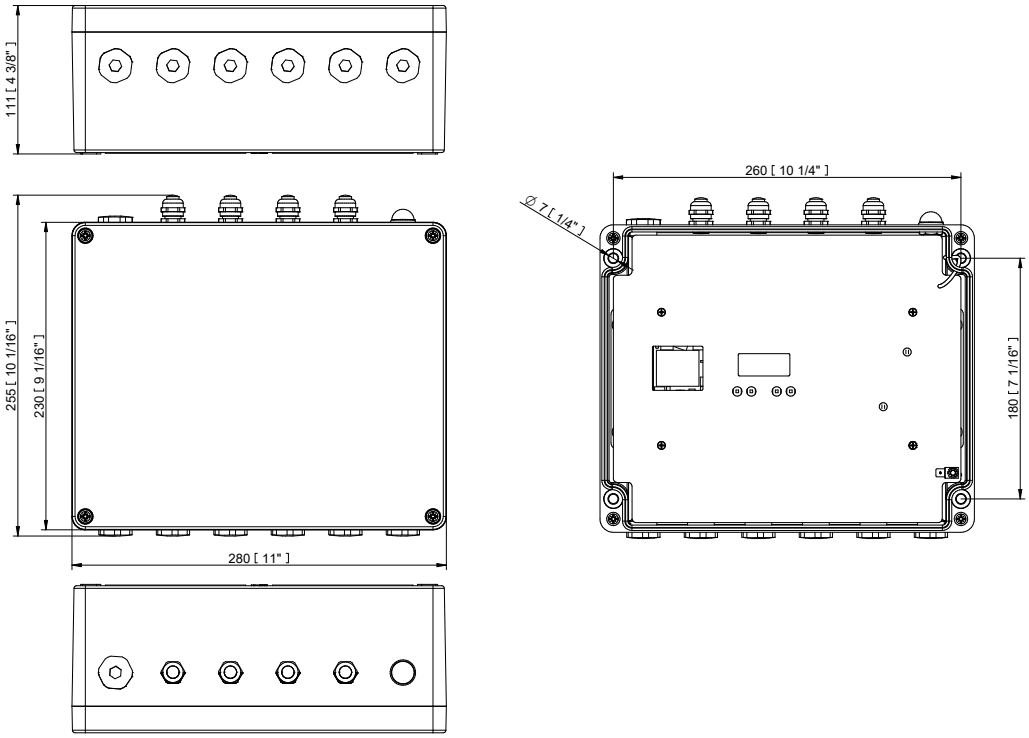

CONNECTIVITY

Following table shows maximum connected Emineres on each output of E-Box with respect of cable length.

	Cable length (m)	Voltage (V)			
		120	190	230	277
EMINERE INGROUND 2 MC	10	32	32	32	32
	20	32	32	32	32
	30	28	32	32	32
	50	17	32	32	32
	70	12	31	32	32
	100	9	21	32	32

	Cable length (m)	Voltage (V)			
		120	190	230	277
EMINERE INGROUND 4 MC	10	21	32	32	32
	20	21	32	32	32
	30	15	32	32	32
	50	9	22	32	32
	70	6	16	23	32
	100	4	11	16	23

Please read the E-boxes user manuals for more information about their setting.

Important: the item “E-box mode“ has to be set at “Pass Thr“ (Personality - E-box mode - Pass Thr).

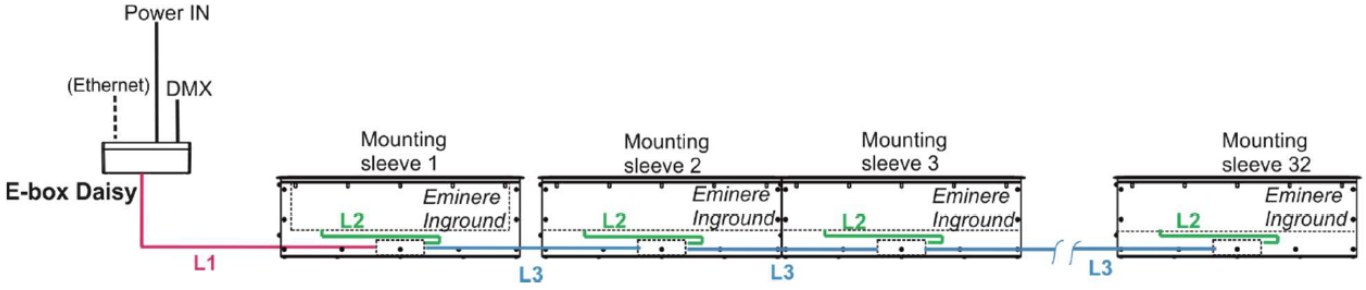

MOUNTING ACCESSORIES (ORDER SEPARATELY)

Mounting sleeve

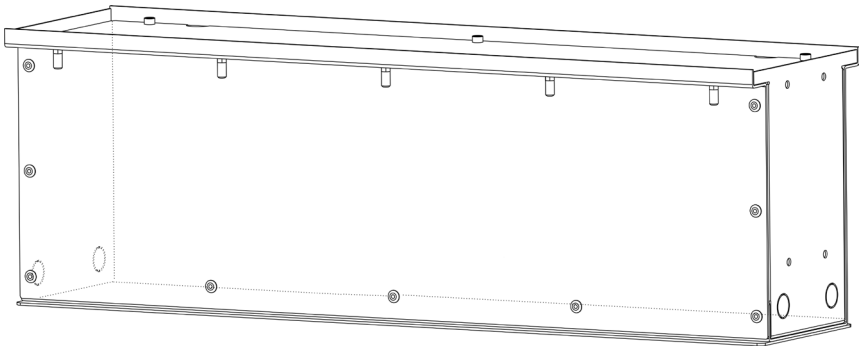

Cover Plates

Two types of Cover Plates must be ordered separately, depending on installation option:

Cover Plate Continuous (includes set of 2pcs)
Cover Plate End (includes set of 2pcs)

Examples:

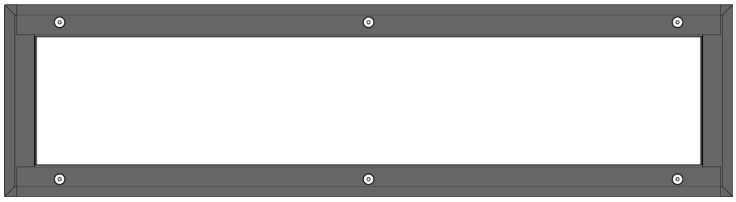

Cover plate set-up for STAND ALONE option (consist of 1x set of Cover Plate Continuous and 1x set of Cover Plate End).
Cover Plate Continuous is always packed together with 1x Cover Plate Middle.

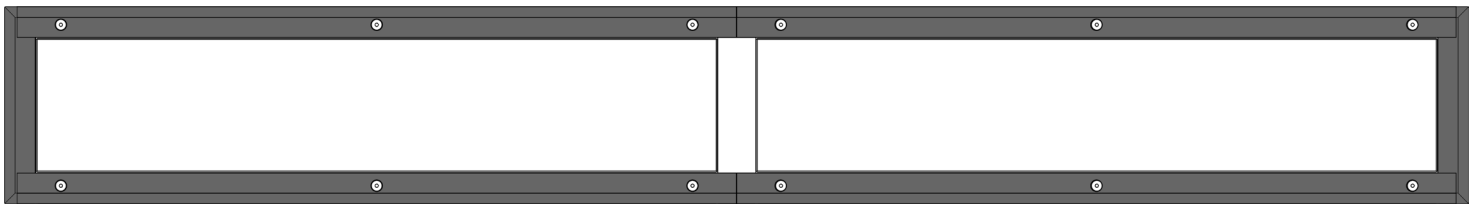

Cover plate set-up for HEAD2HEAD connection option (consist of 2x set of Cover Plate Continuous, 1x Cover Plate Middle and 1x set of Cover Plate End).
Cover Plate Continuous is always packed together with 1x Cover Plate Middle.

PHOTOMETRIC DATA

Eminere Inground 4 MC RGBCW
Clear Glass WallWasher

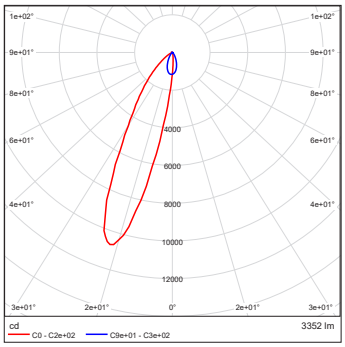

Eminere Inground 4 MC RGBCW
Clear Glass Wide WallWasher

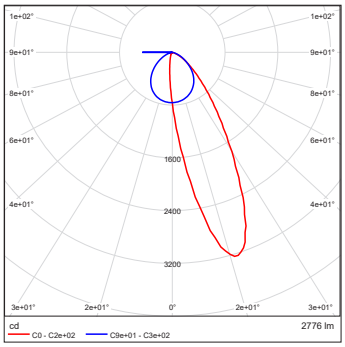

Eminere Inground 4 MC RGBCW
Anti-Skid Glass WallWasher

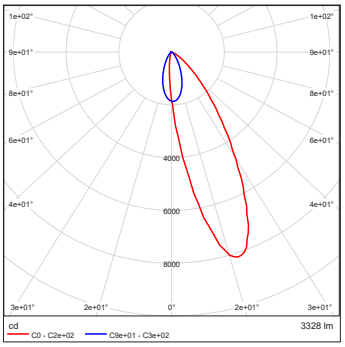

Eminere Inground 4 MC RGBCW
Anti-Skid Glass Wide WallWasher

