ArcSource 140 COB Recessed ™

Client: _____

Project: _____

Specifier: _____

Type: _____ Qty: ____

IP2X

FEATURES:

- Input Voltage: 48V DC
- Power consumption: 140W
- Light Source: 130W COB LED
- Delivered Lumen: TBC
- Projected LED Life: 60,000
- Control: ArcPower 140 COB
- Housing: Precision Turned Aluminium
- Mounting Method: Mounting Trim Kit
- IP Rating: IP2X
- Operating Ambient Temp: -20°C/+40°C (-4°F/+104°F)
- Certification: ETL / cETL, CE, RoHS
- 5 Year Warranty

Fixture

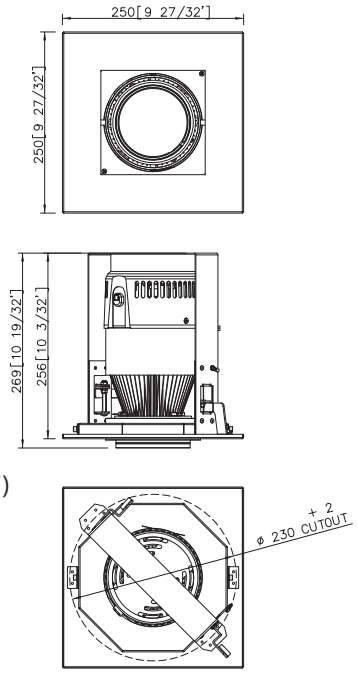

Trim Kit

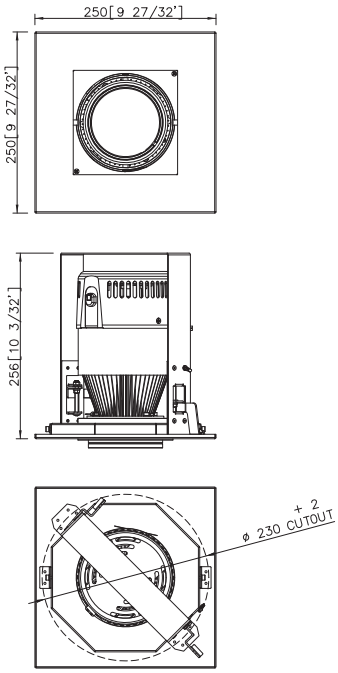

How To Order							
	GROUP	VARIANT	SIZE	COLOUR	OPTIC	FINISH	OPTIONS
ARC	1	2	3	4	5	6	7
	SCE	COB	140	PW - Pure White	23°	S - Silver	CUS - Custom
					D1	B - Black	MTP - Multiple
					D2	W - White	CCL - Custom Cable Length
					D3	C - Custom	
					Diffuser: D1=28°, D2=40°, D3=50°		
Example	ARCSOURCE 140 COB PW 33 S						
ARC	SCE	COB	140	PW	33	S	

Connection Scheme:

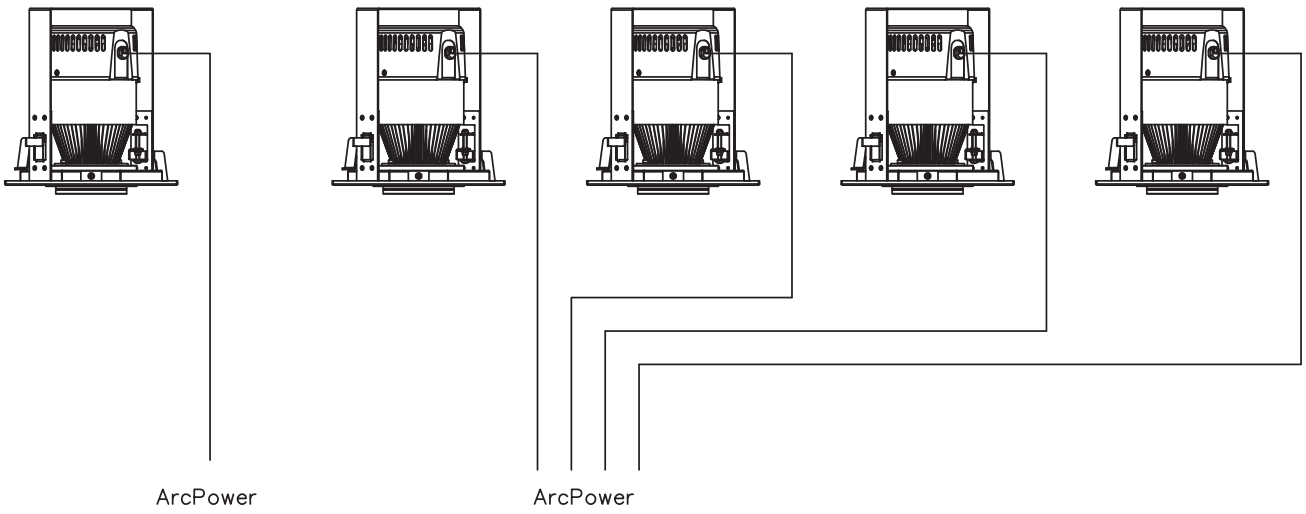

Product Specification:

Electrical	Input Voltage		48V
	Power Consumption		140W +/- 10%
Optical	Light Source		130W COB LED
		PW	2700K or 6000K
	LED Channels		Pure White
	Beam Angle		23°, 33° + Optional Diffuser
	CRI		82 (6000K)
	Projected Lumen Maintenance		60,000 hrs (L70@ 25°C / 77°F)
Control	Wireless DMX (Optional Accessory)		N/A
	Control System		ArcPower 140 COB
	Power Supply		ArcPower 140 COB
	Stand Alone Control		No
Physical	Width x Height x Depth	Inches	9.84, 8.86, 9.84 Including Trim
		mm	250, 225, 250 Including Trim
	Weight		LED Module / Trim
		lbs	5.5 / 3.3
		kg	2.5 / 1.5
	Housing		Precision Turned Alluminium Glass Cover
	Fixture Cables and Connections		Li9Y11Y - 2xAWG16+1xAWG20, Chogori 3-Pin Connector
	Fixing Method		Mounting Trim Kit
	Adjustability		Tilt 15°
	IP Rating		IP2X
	Cooling System		Silent Cooling Fan
	Operating Ambient Temperature		-20°C / +40°C (-4°F / +104°F)
	Operating Temperature		TBC
	Listings		ETL / cETL, CE, RoHS
Certification			

Subject to change without notice - please contact Anolis for clarification

Accessories	Description
	Mounting Trim Kit (Inclulded) Anti-Glare Louvre (Optional) Diffuser 28° (Optional) Diffuser 40° (Optional) Diffuser 50° (Optional) Diffuser Holder (Optional)

Photometric Data:

For foot Candles divide lux by 10.7

----------°

Total Luminous Flux: